LPC1110/11/12/13/14/15

32-bit ARM Cortex-M0 microcontroller; up to 64 kB flash and 8 kB SRAM

Rev. 7.5 — 2 October 2012 Product data sheet

1. General description

The LPC1110/11/12/13/14/15 are a ARM Cortex-M0 based, low-cost 32-bit MCU family, designed for 8/16-bit microcontroller applications, offering performance, low power, simple instruction set and memory addressing together with reduced code size compared to existing 8/16-bit architectures.

The LPC1110/11/12/13/14/15 operate at CPU frequencies of up to 50 MHz.

The peripheral complement of the LPC1110/11/12/13/14/15 includes up to 64 kB of flash memory, up to 8 kB of data memory, one Fast-mode Plus I^2C-bus interface, one RS-485/EIA-485 UART, up to two SPI interfaces with SSP features, four general purpose counter/timers, a 10-bit ADC, and up to 42 general purpose I/O pins.

Remark: The LPC111x series consists of the LPC1100 series (parts LPC111x/101/201/301), LPC1100L series (parts LPC111x/002/102/202/302), and the LPC1100XL series (parts LPC111x/103/203/303/323/333). The LPC1100L and LPC1100XL series include the power profiles, a windowed watchdog timer, and a configurable open-drain mode.

2. Features and benefits

- System:
  - ARM Cortex-M0 processor, running at frequencies of up to 50 MHz.
  - ARM Cortex-M0 built-in Nested Vectored Interrupt Controller (NVIC).
  - Non-Maskable Interrupt (NMI) input selectable from several input sources (LPC1100XL series only).
  - Serial Wire Debug.
  - System tick timer.
- Memory:
  - 64 kB (LPC1115), 56 kB (LPC1114/333), 48 kB (LPC1114/323), 32 kB (LPC1114/102/201/202/203/301/302/303), 24 kB (LPC1113), 16 kB (LPC1112), 8 kB (LPC1111),or 4 kB (LPC1110) on-chip flash programming memory.
  - 256 byte page erase function (LPC1100XL series only)
  - 8 kB, 4 kB, 2 kB, or 1 kB SRAM.
  - In-System Programming (ISP) and In-Application Programming (IAP) via on-chip bootloader software.
- Digital peripherals:
  - Up to 42 General Purpose I/O (GPIO) pins with configurable pull-up/pull-down resistors. In addition, a configurable open-drain mode is supported on the LPC1100L and LPC1100XL series.

- GPIO pins can be used as edge and level sensitive interrupt sources.
- High-current output driver (20 mA) on one pin.
- High-current sink drivers (20 mA) on two I^2C-bus pins in Fast-mode Plus (not on LPC1112FDH20/102).
- Four general purpose counter/timers with up to eight capture inputs and up to 13 match outputs.
- Programmable WatchDog Timer (WDT) the LPC1100 series only.
- Programmable windowed WDT on the LPC1100L and LPC1100XL series only.

- Analog peripherals:
  - 10-bit ADC with input multiplexing among 5, 6, or 8 pins depending on package size.
- Serial interfaces:
  - UART with fractional baud rate generation, internal FIFO, and RS-485 support.
  - Two SPI controllers with SSP features and with FIFO and multi-protocol capabilities (second SPI on LPC1100 and LPC1100L series LQFP48 package only).
  - I^2C-bus interface supporting full I^2C-bus specification and Fast-mode Plus with a data rate of 1 Mbit/s with multiple address recognition and monitor mode (not on LPC1112FDH20/102).
- Clock generation:
  - 12 MHz internal RC oscillator trimmed to 1 % accuracy that can optionally be used as a system clock.
  - Crystal oscillator with an operating range of 1 MHz to 25 MHz.
  - Programmable watchdog oscillator with a frequency range of 9.4 kHz to 2.3 MHz.
  - PLL allows CPU operation up to the maximum CPU rate without the need for a high-frequency crystal. May be run from the system oscillator or the internal RC oscillator.
  - Clock output function with divider that can reflect the system oscillator clock, IRC clock, CPU clock, and the Watchdog clock.
- Power control:
  - Integrated PMU (Power Management Unit) to minimize power consumption during Sleep, Deep-sleep, and Deep power-down modes.
  - Power profiles residing in boot ROM allowing to optimize performance and minimize power consumption for any given application through one simple function call. (LPC1100L and LPC1100XL series only.)
  - Three reduced power modes: Sleep, Deep-sleep, and Deep power-down.
  - Processor wake-up from Deep-sleep mode via a dedicated start logic using up to 13 of the functional pins.
  - Power-On Reset (POR).
  - Brownout detect with up to four separate thresholds for interrupt and forced reset.
- Unique device serial number for identification.
- Single power supply (1.8 V to 3.6 V).
- Available as LQFP48 package and HVQFN33 package.
- LPC1100L series available as TSSOP28 package, DIP28 package, TSSOP20 package, and SO20 package.

All information provided in this document is subject to legal disclaimers.

© NXP B.V. 2012. All rights reserved.

3. Applications

- eMetering
- Alarm systems
- Lighting
- White goods

4. Ordering information

Table 1. Ordering information

Type number	Package		
	Name	Description	Version
SO20, TSSOP20, TSSOP28, and DIP28 packages			
LPC1110FD20[1]	SO20	SO20: plastic small outline package; 20 leads; body width 7.5 mm	SOT163-1
LPC1111FDH20/002[1]	TSSOP20	TSSOP20: plastic thin shrink small outline package; 20 leads; body width 4.4 mm	SOT360-1
LPC1112FD20/102[1]	SO20	SO20: plastic small outline package; 20 leads; body width 7.5 mm	SOT163-1
LPC1112FDH20/102	TSSOP20	TSSOP20: plastic thin shrink small outline package; 20 leads; body width 4.4 mm	SOT360-1
LPC1112FDH28/102	TSSOP28	TSSOP28: plastic thin shrink small outline package; 28 leads; body width 4.4 mm	SOT361-1
LPC1114FDH28/102	TSSOP28	TSSOP28: plastic thin shrink small outline package; 28 leads; body width 4.4 mm	SOT361-1
LPC1114FN28/102	DIP28	DIP28: plastic dual in-line package; 28 leads (600 mil)	SOT117-1
HVQFN24/33 and LQFP48 packages			
LPC1111FHN33/101	HVQFN33	HVQFN: plastic thermal enhanced very thin quad flat package; no leads; 33 terminals; body 7 × 7 × 0.85 mm	n/a
LPC1111FHN33/102	HVQFN33	HVQFN: plastic thermal enhanced very thin quad flat package; no leads; 33 terminals; body 7 × 7 × 0.85 mm	n/a
LPC1111FHN33/201	HVQFN33	HVQFN: plastic thermal enhanced very thin quad flat package; no leads; 33 terminals; body 7 × 7 × 0.85 mm	n/a
LPC1111FHN33/202	HVQFN33	HVQFN: plastic thermal enhanced very thin quad flat package; no leads; 33 terminals; body 7 × 7 × 0.85 mm	n/a
LPC1111FHN33/103	HVQFN33	HVQFN: plastic thermal enhanced very thin quad flat package; no leads; 33 terminals; body 7 × 7 × 0.85 mm	n/a
LPC1111FHN33/203	HVQFN33	HVQFN: plastic thermal enhanced very thin quad flat package; no leads; 33 terminals; body 7 × 7 × 0.85 mm	n/a
LPC1112FHN33/101	HVQFN33	HVQFN: plastic thermal enhanced very thin quad flat package; no leads; 33 terminals; body 7 × 7 × 0.85 mm	n/a
LPC1112FHN33/102	HVQFN33	HVQFN: plastic thermal enhanced very thin quad flat package; no leads; 33 terminals; body 7 × 7 × 0.85 mm	n/a
LPC1112FHN33/201	HVQFN33	HVQFN: plastic thermal enhanced very thin quad flat package; no leads; 33 terminals; body 7 × 7 × 0.85 mm	n/a
LPC1112FHN33/202	HVQFN33	HVQFN: plastic thermal enhanced very thin quad flat package; no leads; 33 terminals; body 7 × 7 × 0.85 mm	n/a
LPC1112FHN24/202	HVQFN24	HVQFN24: plastic thermal enhanced very thin quad flat package; no leads; 24 terminals; body 4 x 4 x 0.85 mm	SOT616-3
LPC1112FHI33/202	HVQFN33	HVQFN: plastic thermal enhanced very thin quad flat package; no leads; 33 terminals; body 5 × 5 × 0.85 mm	n/a

All information provided in this document is subject to legal disclaimers.

© NXP B.V. 2012. All rights reserved.

Table 1. Ordering information *...continued*

Type number	Package		
	Name	Description	Version
LPC1112FHI33/203	HVQFN33	HVQFN: plastic thermal enhanced very thin quad flat package; no leads; 33 terminals; body 5 × 5 × 0.85 mm	n/a
LPC1112FHN33/103	HVQFN33	HVQFN: plastic thermal enhanced very thin quad flat package; no leads; 33 terminals; body 7 × 7 × 0.85 mm	n/a
LPC1112FHN33/203	HVQFN33	HVQFN: plastic thermal enhanced very thin quad flat package; no leads; 33 terminals; body 7 × 7 × 0.85 mm	n/a
LPC1113FHN33/201	HVQFN33	HVQFN: plastic thermal enhanced very thin quad flat package; no leads; 33 terminals; body 7 × 7 × 0.85 mm	n/a
LPC1113FHN33/202	HVQFN33	HVQFN: plastic thermal enhanced very thin quad flat package; no leads; 33 terminals; body 7 × 7 × 0.85 mm	n/a
LPC1113FHN33/203	HVQFN33	HVQFN: plastic thermal enhanced very thin quad flat package; no leads; 33 terminals; body 7 × 7 × 0.85 mm	n/a
LPC1113FHN33/301	HVQFN33	HVQFN: plastic thermal enhanced very thin quad flat package; no leads; 33 terminals; body 7 × 7 × 0.85 mm	n/a
LPC1113FHN33/302	HVQFN33	HVQFN: plastic thermal enhanced very thin quad flat package; no leads; 33 terminals; body 7 × 7 × 0.85 mm	n/a
LPC1113FHN33/303	HVQFN33	HVQFN: plastic thermal enhanced very thin quad flat package; no leads; 33 terminals; body 7 × 7 × 0.85 mm	n/a
LPC1114FHN33/201	HVQFN33	HVQFN: plastic thermal enhanced very thin quad flat package; no leads; 33 terminals; body 7 × 7 × 0.85 mm	n/a
LPC1114FHN33/202	HVQFN33	HVQFN: plastic thermal enhanced very thin quad flat package; no leads; 33 terminals; body 7 × 7 × 0.85 mm	n/a
LPC1114FHN33/301	HVQFN33	HVQFN: plastic thermal enhanced very thin quad flat package; no leads; 33 terminals; body 7 × 7 × 0.85 mm	n/a
LPC1114FHN33/302	HVQFN33	HVQFN: plastic thermal enhanced very thin quad flat package; no leads; 33 terminals; body 7 × 7 × 0.85 mm	n/a
LPC1114FHI33/302	HVQFN33	HVQFN: plastic thermal enhanced very thin quad flat package; no leads; 33 terminals; body 5 × 5 × 0.85 mm	n/a
LPC1114FHI33/303	HVQFN33	HVQFN: plastic thermal enhanced very thin quad flat package; no leads; 33 terminals; body 5 × 5 × 0.85 mm	n/a
LPC1114FHN33/203	HVQFN33	HVQFN: plastic thermal enhanced very thin quad flat package; no leads; 33 terminals; body 7 × 7 × 0.85 mm	n/a
LPC1114FHN33/303	HVQFN33	HVQFN: plastic thermal enhanced very thin quad flat package; no leads; 33 terminals; body 7 × 7 × 0.85 mm	n/a
LPC1114FHN33/333	HVQFN33	HVQFN: plastic thermal enhanced very thin quad flat package; no leads; 33 terminals; body 7 × 7 × 0.85 mm	n/a
LPC1113FBD48/301	LQFP48	LQFP48: plastic low profile quad flat package; 48 leads; body 7 × 7 × 1.4 mm	SOT313-2
LPC1113FBD48/302	LQFP48	LQFP48: plastic low profile quad flat package; 48 leads; body 7 × 7 × 1.4 mm	SOT313-2
LPC1113FBD48/303	LQFP48	LQFP48: plastic low profile quad flat package; 48 leads; body 7 × 7 × 1.4 mm	SOT313-2
LPC1114FBD48/301	LQFP48	LQFP48: plastic low profile quad flat package; 48 leads; body 7 × 7 × 1.4 mm	SOT313-2
LPC1114FBD48/302	LQFP48	LQFP48: plastic low profile quad flat package; 48 leads; body 7 × 7 × 1.4 mm	SOT313-2

All information provided in this document is subject to legal disclaimers.

© NXP B.V. 2012. All rights reserved.

Table 1. Ordering information *...continued*

Type number	Package		
	Name	Description	Version
LPC1114FBD48/303	LQFP48	LQFP48: plastic low profile quad flat package; 48 leads; body 7 × 7 × 1.4 mm	SOT313-2
LPC1114FBD48/323	LQFP48	LQFP48: plastic low profile quad flat package; 48 leads; body 7 × 7 × 1.4 mm	SOT313-2
LPC1114FBD48/333	LQFP48	LQFP48: plastic low profile quad flat package; 48 leads; body 7 × 7 × 1.4 mm	SOT313-2
LPC1115FBD48/303	LQFP48	LQFP48: plastic low profile quad flat package; 48 leads; body 7 × 7 × 1.4 mm	SOT313-2

[1] Available as samples only.

4.1 Ordering options

Table 2. Ordering options

Type number	Series	Flash	Total SRAM	Power profiles	UART RS-485	I^2C/ Fast+	SPI	ADC channels	GPIO	Package
LPC1110										
LPC1110FD20	LPC1100L	4 kB	1 kB	yes	1	1	1	5	16	SO20
LPC1111										
LPC1111FDH20/002	LPC1100L	8 kB	2 kB	yes	1	1	1	5	16	TSSOP20
LPC1111FHN33/101	LPC1100	8 kB	2 kB	no	1	1	1	8	28	HVQFN33
LPC1111FHN33/102	LPC1100L	8 kB	2 kB	yes	1	1	1	8	28	HVQFN33
LPC1111FHN33/103	LPC1100XL	8 kB	2 kB	yes	1	1	2	8	28	HVQFN33
LPC1111FHN33/201	LPC1100	8 kB	4 kB	no	1	1	1	8	28	HVQFN33
LPC1111FHN33/202	LPC1100L	8 kB	4 kB	yes	1	1	1	8	28	HVQFN33
LPC1111FHN33/203	LPC1100XL	8 kB	4 kB	yes	1	1	2	8	28	HVQFN33
LPC1112										
LPC1112FD20/102	LPC1100L	16 kB	4 kB	yes	1	1	1	5	16	SO20
LPC1112FDH20/102	LPC1100L	16 kB	4 kB	yes	1	-	1	5	14	TSSOP20
LPC1112FDH28/102	LPC1100L	16 kB	4 kB	yes	1	1	1	6	22	TSSOP28
LPC1112FHN24/202	LPC1100L	16 kB	2 kB	yes	1	1	1	6	19	HVQFN24
LPC1112FHN33/101	LPC1100	16 kB	2 kB	no	1	1	1	8	28	HVQFN33
LPC1112FHN33/102	LPC1100L	16 kB	2 kB	yes	1	1	1	8	28	HVQFN33
LPC1112FHN33/103	LPC1100XL	16 kB	2 kB	yes	1	1	2	8	28	HVQFN33
LPC1112FHN33/201	LPC1100	16 kB	4 kB	no	1	1	1	8	28	HVQFN33
LPC1112FHN33/202	LPC1100L	16 kB	4 kB	yes	1	1	1	8	28	HVQFN33
LPC1112FHN33/203	LPC1100XL	16 kB	4 kB	yes	1	1	2	8	28	HVQFN33
LPC1112FHI33/202	LPC1100L	16 kB	4 kB	yes	1	1	1	8	28	HVQFN33
LPC1112FHI33/203	LPC1100XL	16 kB	4 kB	yes	1	1	2	8	28	HVQFN33
LPC1113										
LPC1113FHN33/201	LPC1100	24 kB	4 kB	no	1	1	1	8	28	HVQFN33
LPC1113FHN33/202	LPC1100L	24 kB	4 kB	yes	1	1	1	8	28	HVQFN33

All information provided in this document is subject to legal disclaimers.

© NXP B.V. 2012. All rights reserved.

Table 2. Ordering options

Type number	Series	Flash	Total SRAM	Power profiles	UART RS-485	I^2C/ Fast+	SPI	ADC channels	GPIO	Package
LPC1113FHN33/203	LPC1100XL	24 kB	4 kB	yes	1	1	2	8	28	HVQFN33
LPC1113FHN33/301	LPC1100	24 kB	8 kB	no	1	1	1	8	28	HVQFN33
LPC1113FHN33/302	LPC1100L	24 kB	8 kB	yes	1	1	1	8	28	HVQFN33
LPC1113FHN33/303	LPC1100XL	24 kB	8 kB	yes	1	1	2	8	28	HVQFN33
LPC1113FBD48/301	LPC1100	24 kB	8 kB	no	1	1	2	8	42	LQFP48
LPC1113FBD48/302	LPC1100L	24 kB	8 kB	yes	1	1	2	8	42	LQFP48
LPC1113FBD48/303	LPC1100XL	24 kB	8 kB	yes	1	1	2	8	42	LQFP48
LPC1114										
LPC1114FDH28/102	LPC1100L	32 kB	4 kB	yes	1	1	1	6	22	TSSOP28
LPC1114FN28/102	LPC1100L	32 kB	4 kB	yes	1	1	1	6	22	DIP28
LPC1114FHN33/201	LPC1100	32 kB	4 kB	no	1	1	1	8	28	HVQFN33
LPC1114FHN33/202	LPC1100L	32 kB	4 kB	yes	1	1	1	8	28	HVQFN33
LPC1114FHN33/203	LPC1100XL	32 kB	4 kB	yes	1	1	2	8	28	HVQFN33
LPC1114FHN33/301	LPC1100	32 kB	8 kB	no	1	1	1	8	28	HVQFN33
LPC1114FHN33/302	LPC1100L	32 kB	8 kB	yes	1	1	1	8	28	HVQFN33
LPC1114FHN33/303	LPC1100XL	32 kB	8 kB	yes	1	1	2	8	28	HVQFN33
LPC1114FHN33/333	LPC1100XL	56 kB	8 kB	yes	1	1	2	8	28	HVQFN33
LPC1114FHI33/302	LPC1100L	32 kB	8 kB	yes	1	1	1	8	28	HVQFN33
LPC1114FHI33/303	LPC1100XL	32 kB	8 kB	yes	1	1	2	8	28	HVQFN33
LPC1114FBD48/301	LPC1100	32 kB	8 kB	no	1	1	2	8	42	LQFP48
LPC1114FBD48/302	LPC1100L	32 kB	8 kB	yes	1	1	2	8	42	LQFP48
LPC1114FBD48/303	LPC1100XL	32 kB	8 kB	yes	1	1	2	8	42	LQFP48
LPC1114FBD48/323	LPC1100XL	48 kB	8 kB	yes	1	1	2	8	42	LQFP48
LPC1114FBD48/333	LPC1100XL	56 kB	8 kB	yes	1	1	2	8	42	LQFP48
LPC1115										
LPC1115FBD48/303	LPC1100XL	64 kB	8 kB	yes	1	1	2	8	42	LQFP48

All information provided in this document is subject to legal disclaimers.

© NXP B.V. 2012. All rights reserved.

5. Block diagram

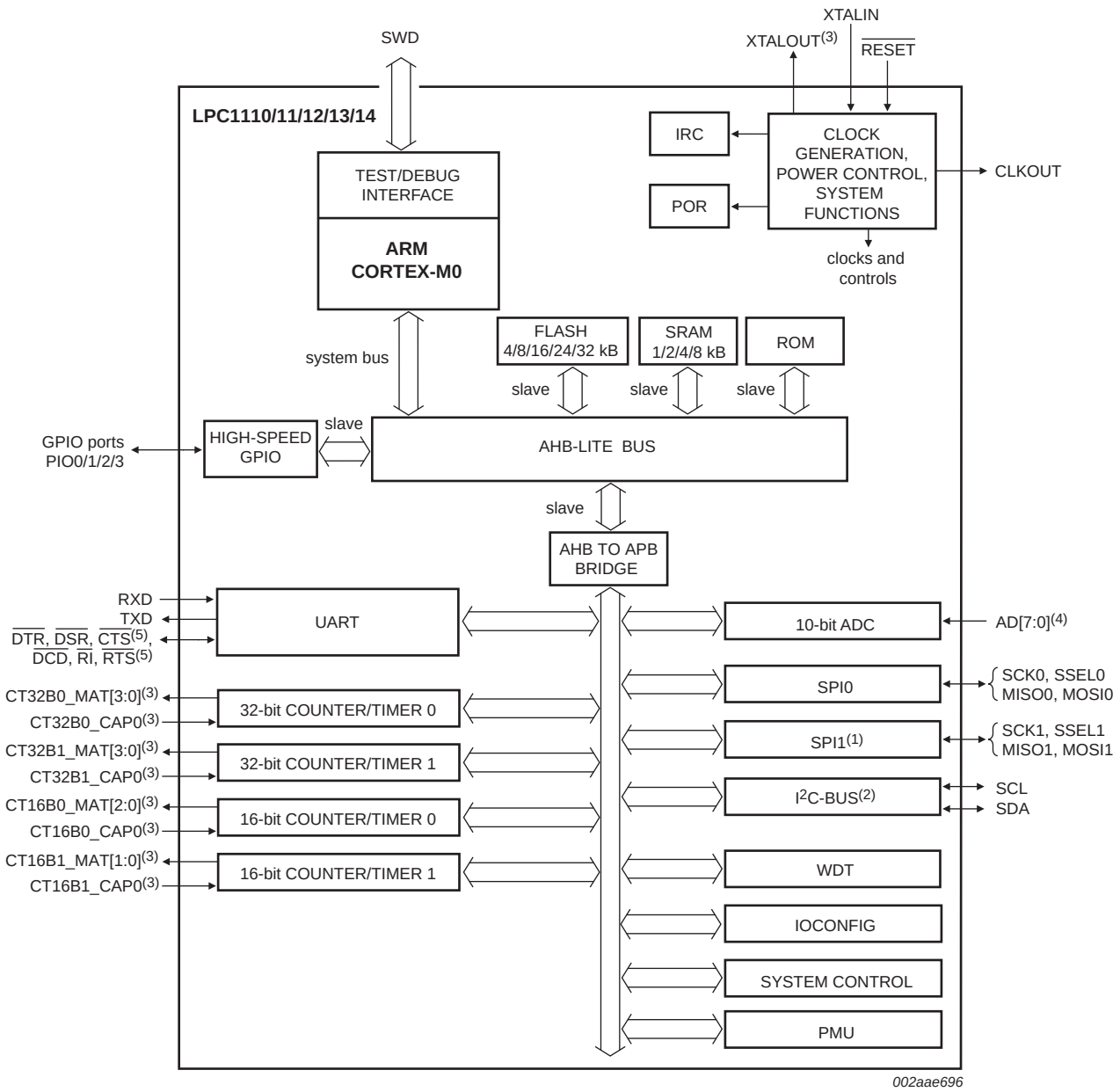

(1) LQFP48 packages only.

(2) Not on LPC1112FDH20/102.

(3) All pins available on LQFP48 and HVQFN33 packages. CT16B1_MAT1 not available on TSSOP28/DIP28 packages. CT32B1_MAT3, CT16B1_CAP0, CT16B1_MAT[1:0], CT32B0_CAP0 not available on TSSOP20/SO20 packages. CT16B1_MAT[1:0], CT32B0_CAP0 not available on the HVQFN24 package. XTALOUT not available on LPC1112FHN24.

(4) AD[7:0] available on LQFP48 and HVQFN33 packages. AD[5:0] available on TSSOP28/DIP28 packages. AD[4:0] available on TSSOP20/SO20 packages.

(5) All pins available on LQFP48 packages. RXD, TXD, $\overline{DTR}$, $\overline{CTS}$, $\overline{RTS}$ available on HVQFN 33 packages. RXD, TXD, $\overline{CTS}$, $\overline{RTS}$ available on TSSOP28/DIP28 packages. RXD, TXD, $\overline{CTS}$ available on HVQFN24 packages. RXD, TXD available on TSSOP20/SO20 packages.

Fig 1. LPC1100/LPC1100L series block diagram

All information provided in this document is subject to legal disclaimers.

© NXP B.V. 2012. All rights reserved.

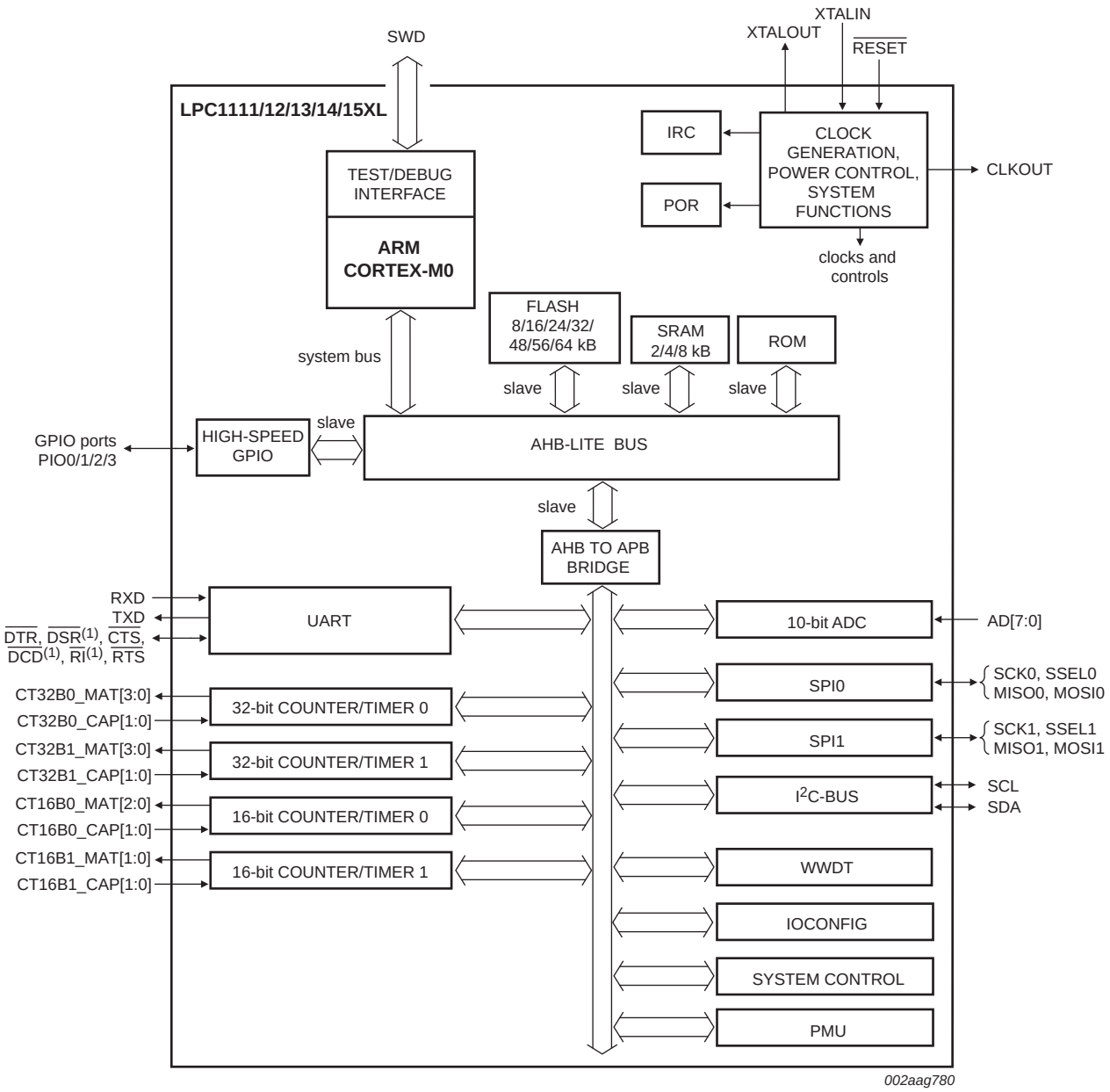

(1) LQFP48 only.

Fig 2. LPC1100XL series block diagram

All information provided in this document is subject to legal disclaimers.

© NXP B.V. 2012. All rights reserved.

6. Pinning information

6.1 Pinning

Table 3. Pin description overview

Part	Pin description table	Pinning diagram
LPC1110FD20	Table 4	Figure 7
LPC1111FDH20/002	Table 4	Figure 8
LPC1112FD20/102	Table 4	Figure 9
LPC1112FDH20/102	Table 5	Figure 8
LPC1112FHN24/202	Table 6	Figure 10
LPC1112FDH28/102	Table 7	Figure 11
LPC1114FDH28/102	Table 7	Figure 12
LPC1114FN28/102	Table 7	Figure 12
LPC1111FHN33/101	Table 9	Figure 5
LPC1111FHN33/102	Table 9	Figure 5
LPC1111FHN33/103	Table 11	Figure 6
LPC1111FHN33/201	Table 9	Figure 5
LPC1111FHN33/202	Table 9	Figure 5
LPC1111FHN33/203	Table 11	Figure 6
LPC1112FHN33/101	Table 9	Figure 5
LPC1112FHN33/102	Table 9	Figure 5
LPC1112FHN33/103	Table 11	Figure 6
LPC1112FHN33/201	Table 9	Figure 5
LPC1112FHN33/202	Table 9	Figure 5
LPC1112FHN33/203	Table 11	Figure 6
LPC1112FHI33/202	Table 9	Figure 5
LPC1112FHI33/203	Table 11	Figure 6
LPC1113FHN33/201	Table 9	Figure 5
LPC1113FHN33/202	Table 9	Figure 5
LPC1113FHN33/203	Table 11	Figure 6
LPC1113FHN33/301	Table 9	Figure 5
LPC1113FHN33/302	Table 9	Figure 5
LPC1113FHN33/303	Table 11	Figure 6
LPC1114FHN33/201	Table 9	Figure 5
LPC1114FHN33/202	Table 9	Figure 5
LPC1114FHN33/203	Table 11	Figure 6
LPC1114FHN33/301	Table 9	Figure 5
LPC1114FHN33/302	Table 9	Figure 5
LPC1114FHN33/303	Table 11	Figure 6
LPC1114FHN33/333	Table 11	Figure 6
LPC1114FHI33/302	Table 9	Figure 5
LPC1114FHI33/303	Table 11	Figure 6

All information provided in this document is subject to legal disclaimers.

© NXP B.V. 2012. All rights reserved.

Table 3. Pin description overview

Part	Pin description table	Pinning diagram
LPC1113FBD48/301	Table 8	Figure 3
LPC1113FBD48/302	Table 8	Figure 3
LPC1113FBD48/303	Table 10	Figure 4
LPC1114FBD48/301	Table 8	Figure 3
LPC1114FBD48/302	Table 8	Figure 3
LPC1114FBD48/303	Table 10	Figure 4
LPC1114FBD48/323	Table 10	Figure 4
LPC1114FBD48/333	Table 10	Figure 4
LPC1115FBD48/303	Table 10	Figure 4

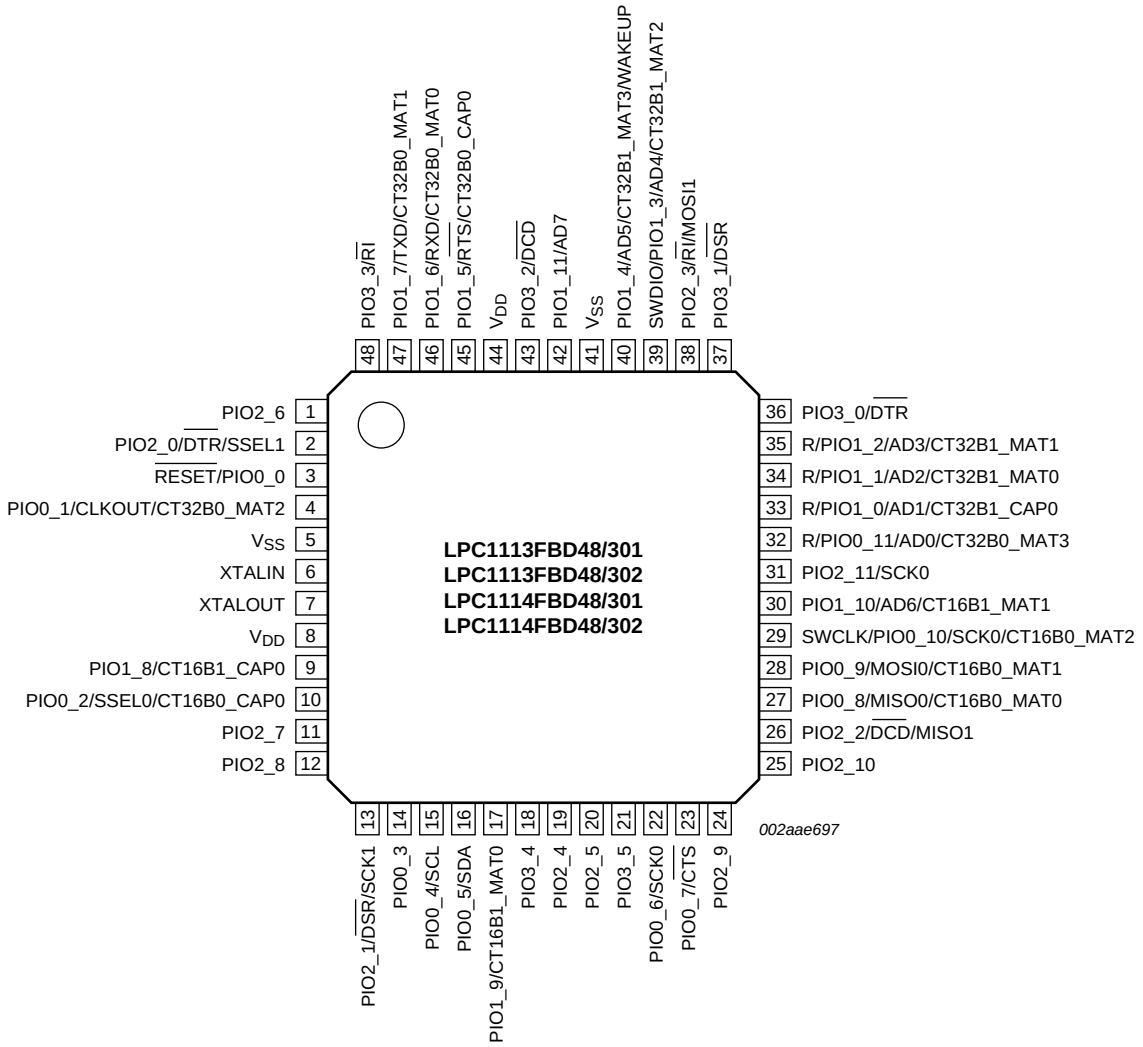

Fig 3. LPC1100 and LPC1100L series pin configuration LQFP48 package

All information provided in this document is subject to legal disclaimers.

© NXP B.V. 2012. All rights reserved.

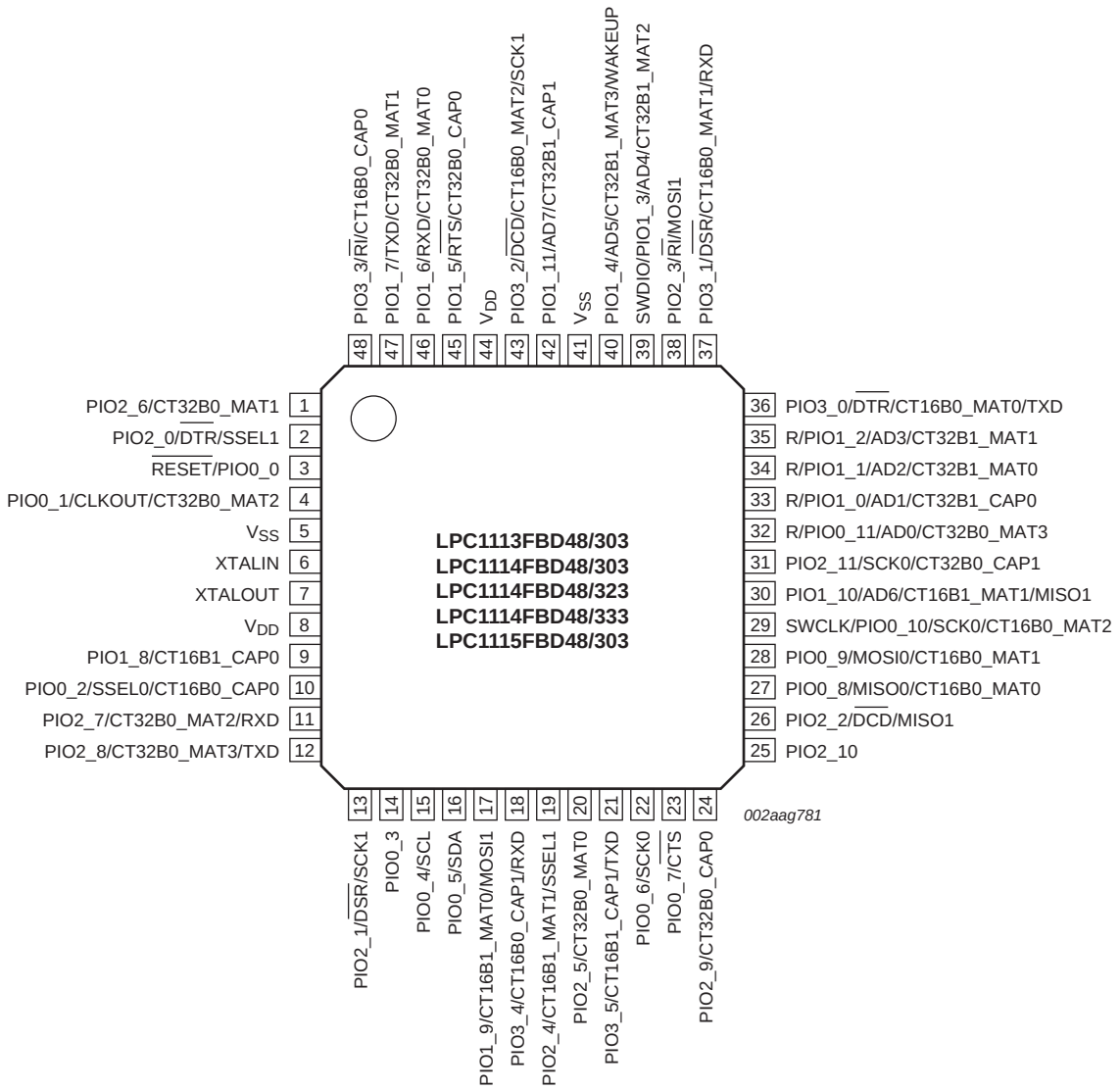

Fig 4. LPC1100XL series pin configuration LQFP48 package

All information provided in this document is subject to legal disclaimers.

© NXP B.V. 2012. All rights reserved.

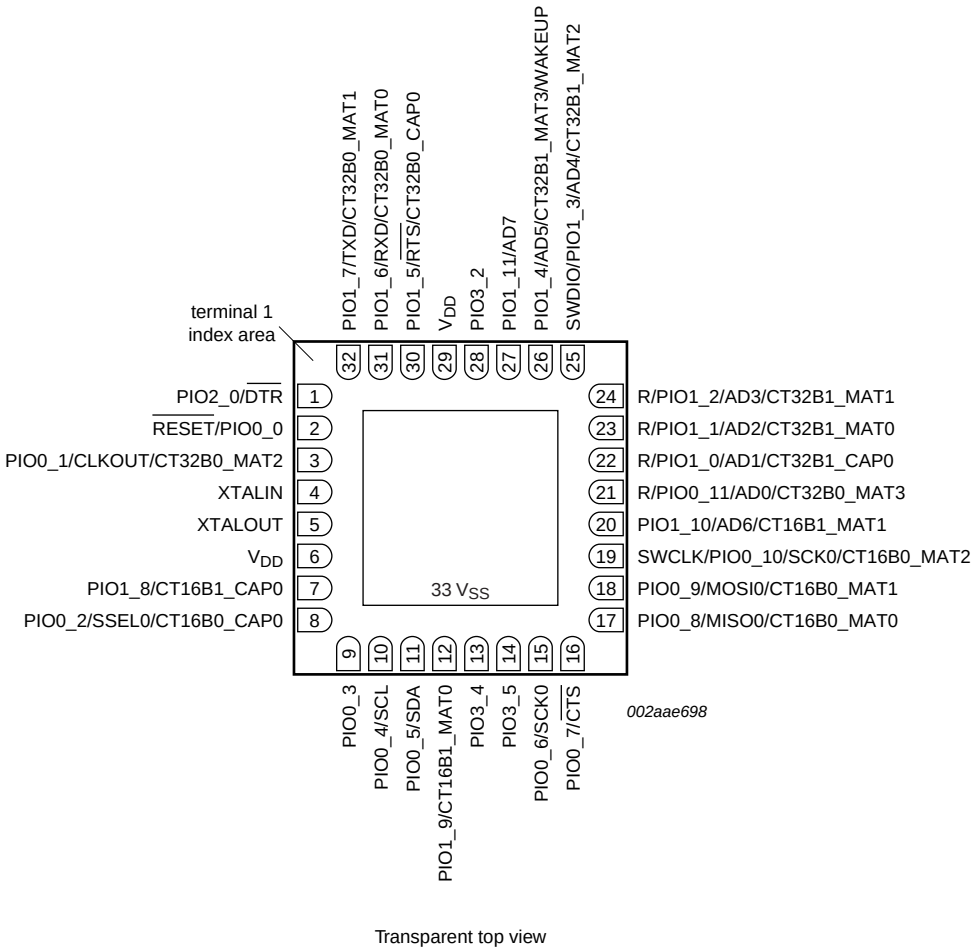

Fig 5. LPC1100 and LPC1100L series pin configuration HVQFN33 7x7 and 5x5 packages

All information provided in this document is subject to legal disclaimers.

© NXP B.V. 2012. All rights reserved.

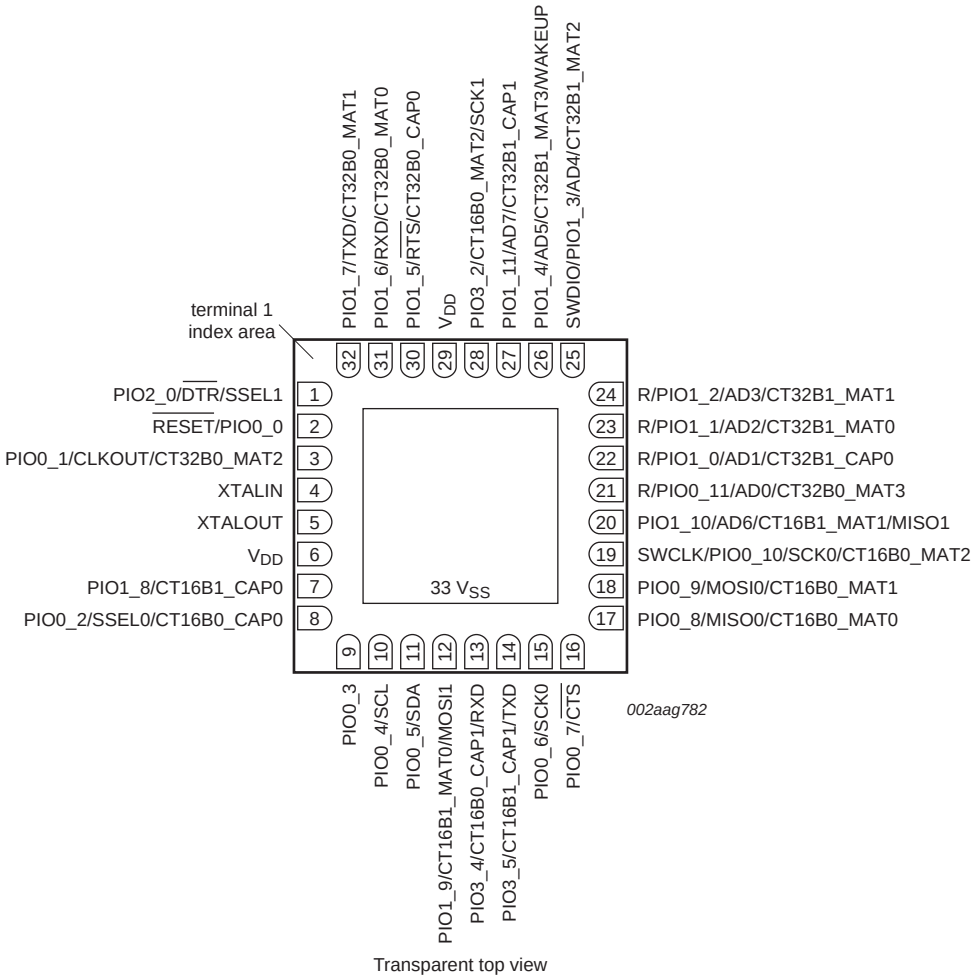

Fig 6. LPC1100XL series pin configuration HVQFN33

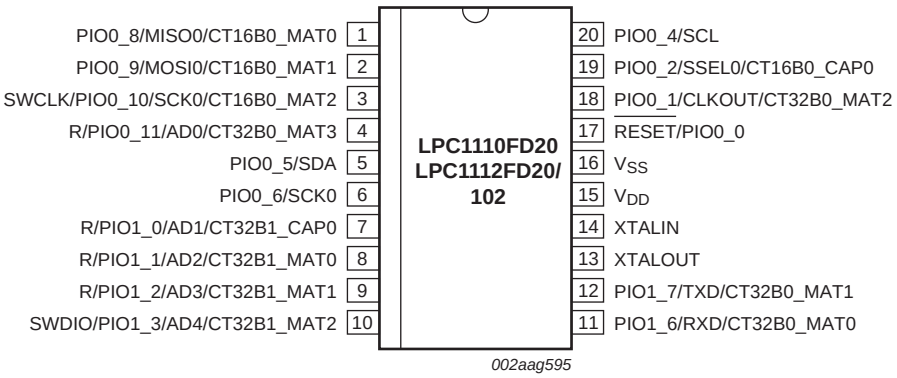

Fig 7. LPC1100L series pin configuration SO20 package

All information provided in this document is subject to legal disclaimers.

© NXP B.V. 2012. All rights reserved.

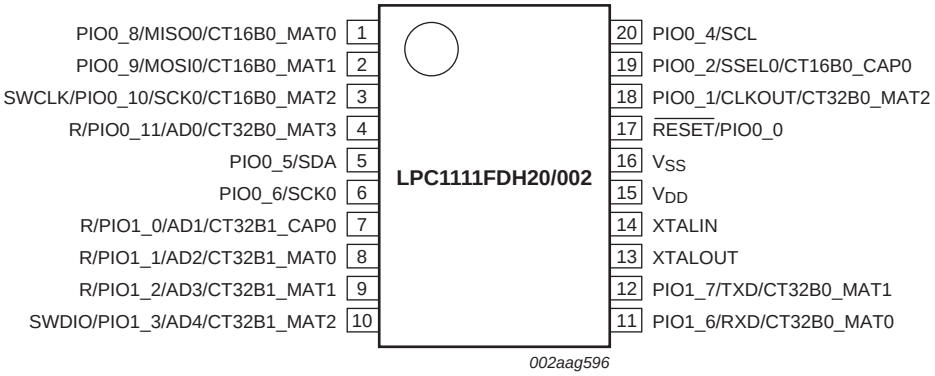

Fig 8. LPC1100L series pin configuration TSSOP20 package with I²C-bus pins

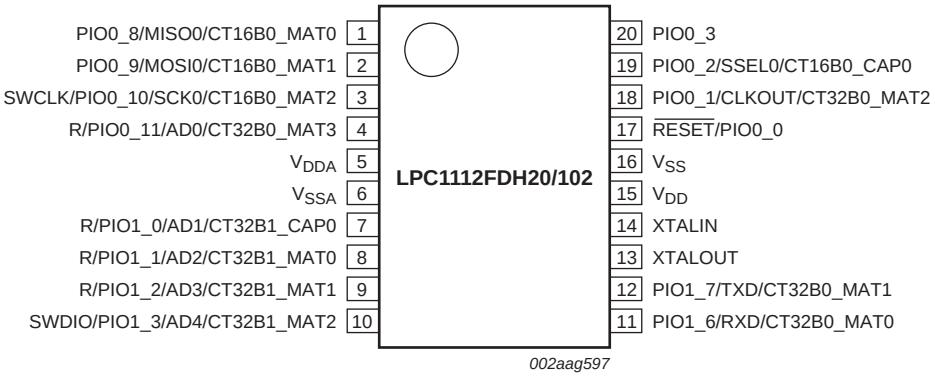

Fig 9. LPC1100L series pin configuration TSSOP20 package with V_{DDA} and V_{SSA} pins

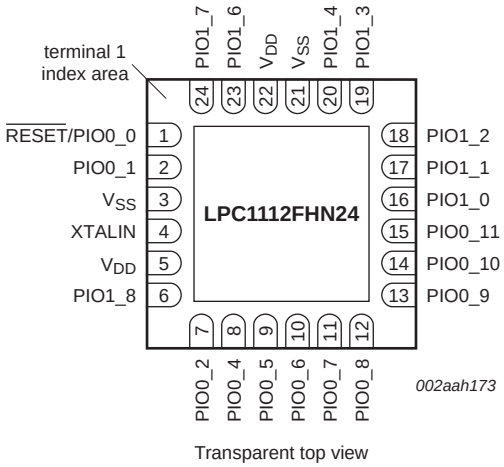

Fig 10. LPC1100L series pin configuration HVQFN24 package

All information provided in this document is subject to legal disclaimers.

© NXP B.V. 2012. All rights reserved.

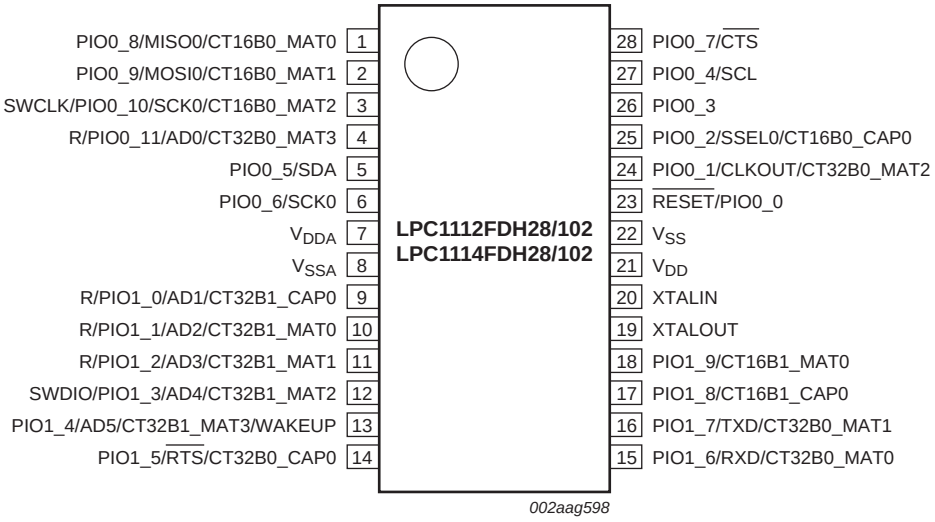

Fig 11. LPC1100L pin configuration TSSOP28 package

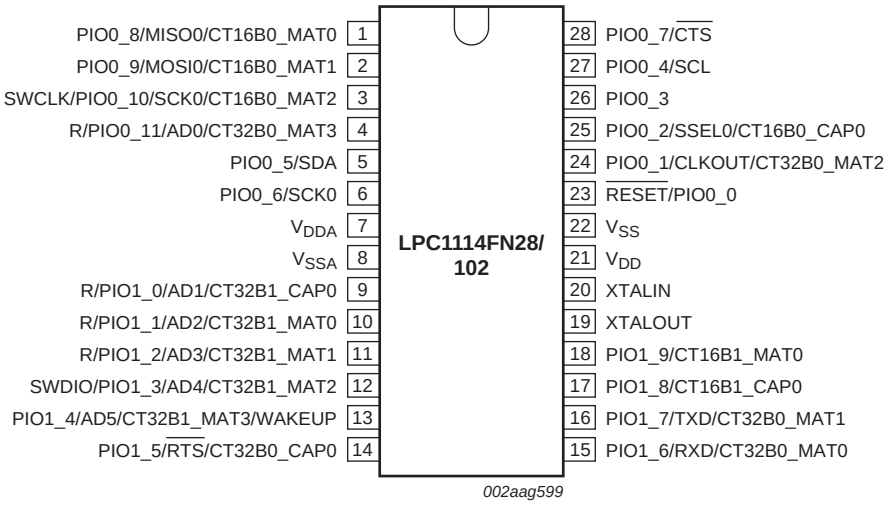

Fig 12. LPC1100L series pin configuration DIP28 package

All information provided in this document is subject to legal disclaimers.

© NXP B.V. 2012. All rights reserved.

6.2 Pin description

Table 4. LPC1100L series: LPC1110/11/12 pin description table (SO20 and TSSOP20 package with I^2C-bus pins)

Symbol	Pin SO20/ TSSOP20		Start logic input	Type	Reset state [1]	Description
PIO0_0 to PIO0_11				I/O		**Port 0 —** Port 0 is a 12-bit I/O port with individual direction and function controls for each bit. The operation of port 0 pins depends on the function selected through the IOCONFIG register block.
$\overline{\text{RESET}}$/PIO0_0	17	[2]	yes	I	I; PU	**$\overline{\text{RESET}}$ —** External reset input with 20 ns glitch filter. A LOW-going pulse as short as 50 ns on this pin resets the device, causing I/O ports and peripherals to take on their default states, and processor execution to begin at address 0.
				I/O	-	**PIO0_0 —** General purpose digital input/output pin with 10 ns glitch filter.
PIO0_1/CLKOUT/ CT32B0_MAT2	18	[3]	yes	I/O	I; PU	**PIO0_1 —** General purpose digital input/output pin. A LOW level on this pin during reset starts the ISP command handler.
				O	-	**CLKOUT —** Clockout pin.
				O	-	**CT32B0_MAT2 —** Match output 2 for 32-bit timer 0.
PIO0_2/SSEL0/ CT16B0_CAP0	19	[3]	yes	I/O	I; PU	**PIO0_2 —** General purpose digital input/output pin.
				I/O	-	**SSEL0 —** Slave Select for SPI0.
				I	-	**CT16B0_CAP0 —** Capture input 0 for 16-bit timer 0.
PIO0_4/SCL	20	[4]	yes	I/O	I; IA	**PIO0_4 —** General purpose digital input/output pin (open-drain).
				I/O	-	**SCL —** I^2C-bus, open-drain clock input/output. High-current sink only if I^2C Fast-mode Plus is selected in the I/O configuration register.
PIO0_5/SDA	5	[4]	yes	I/O	I; IA	**PIO0_5 —** General purpose digital input/output pin (open-drain).
				I/O	-	**SDA —** I^2C-bus, open-drain data input/output. High-current sink only if I^2C Fast-mode Plus is selected in the I/O configuration register.
PIO0_6/SCK0	6	[3]	yes	I/O	I; PU	**PIO0_6 —** General purpose digital input/output pin.
				I/O	-	**SCK0 —** Serial clock for SPI0.
PIO0_8/MISO0/ CT16B0_MAT0	1	[3]	yes	I/O	I; PU	**PIO0_8 —** General purpose digital input/output pin.
				I/O	-	**MISO0 —** Master In Slave Out for SPI0.
				O	-	**CT16B0_MAT0 —** Match output 0 for 16-bit timer 0.
PIO0_9/MOSI0/ CT16B0_MAT1	2	[3]	yes	I/O	I; PU	**PIO0_9 —** General purpose digital input/output pin.
				I/O	-	**MOSI0 —** Master Out Slave In for SPI0.
				O	-	**CT16B0_MAT1 —** Match output 1 for 16-bit timer 0.
SWCLK/PIO0_10/ SCK0/ CT16B0_MAT2	3	[3]	yes	I	I; PU	**SWCLK —** Serial wire clock.
				I/O	-	**PIO0_10 —** General purpose digital input/output pin.
				I/O	-	**SCK0 —** Serial clock for SPI0.
				O	-	**CT16B0_MAT2 —** Match output 2 for 16-bit timer 0.

All information provided in this document is subject to legal disclaimers.

© NXP B.V. 2012. All rights reserved.

Table 4. LPC1100L series: LPC1110/11/12 pin description table (SO20 and TSSOP20 package with I²C-bus pins) *...continued*

Symbol	Pin SO20/ TSSOP20		Start logic input	Type	Reset state [1]	Description
R/PIO0_11/ AD0/CT32B0_MAT3	4	[5]	yes	I	I; PU	**R —** Reserved. Configure for an alternate function in the IOCONFIG block.
				I/O	-	**PIO0_11 —** General purpose digital input/output pin.
				I	-	**AD0 —** A/D converter, input 0.
				O	-	**CT32B0_MAT3 —** Match output 3 for 32-bit timer 0.
PIO1_0 to PIO1_7				I/O		**Port 1 —** Port 1 is a 12-bit I/O port with individual direction and function controls for each bit. The operation of port 1 pins depends on the function selected through the IOCONFIG register block.
R/PIO1_0/ AD1/CT32B1_CAP0	7	[5]	yes	I	I; PU	**R —** Reserved. Configure for an alternate function in the IOCONFIG block.
				I/O	-	**PIO1_0 —** General purpose digital input/output pin.
				I	-	**AD1 —** A/D converter, input 1.
				I	-	**CT32B1_CAP0 —** Capture input 0 for 32-bit timer 1.
R/PIO1_1/ AD2/CT32B1_MAT0	8	[5]	no	O	I; PU	**R —** Reserved. Configure for an alternate function in the IOCONFIG block.
				I/O	-	**PIO1_1 —** General purpose digital input/output pin.
				I	-	**AD2 —** A/D converter, input 2.
				O	-	**CT32B1_MAT0 —** Match output 0 for 32-bit timer 1.
R/PIO1_2/ AD3/CT32B1_MAT1	9	[5]	no	I	I; PU	**R —** Reserved. Configure for an alternate function in the IOCONFIG block.
				I/O	-	**PIO1_2 —** General purpose digital input/output pin.
				I	-	**AD3 —** A/D converter, input 3.
				O	-	**CT32B1_MAT1 —** Match output 1 for 32-bit timer 1.
SWDIO/PIO1_3/ AD4/CT32B1_MAT2	10	[5]	no	I/O	I; PU	**SWDIO —** Serial wire debug input/output.
				I/O	-	**PIO1_3 —** General purpose digital input/output pin.
				I	-	**AD4 —** A/D converter, input 4.
				O	-	**CT32B1_MAT2 —** Match output 2 for 32-bit timer 1.
PIO1_6/RXD/ CT32B0_MAT0	11	[3]	no	I/O	I; PU	**PIO1_6 —** General purpose digital input/output pin.
				I	-	**RXD —** Receiver input for UART.
				O	-	**CT32B0_MAT0 —** Match output 0 for 32-bit timer 0.
PIO1_7/TXD/ CT32B0_MAT1	12	[3]	no	I/O	I; PU	**PIO1_7 —** General purpose digital input/output pin.
				O	-	**TXD —** Transmitter output for UART.
				O	-	**CT32B0_MAT1 —** Match output 1 for 32-bit timer 0.
V_{DD}	15		-		-	3.3 V supply voltage to the internal regulator, the external rail, and the ADC. Also used as the ADC reference voltage.
XTALIN	14	[6]	-	I	-	Input to the oscillator circuit and internal clock generator circuits. Input voltage must not exceed 1.8 V.
XTALOUT	13	[6]	-	O	-	Output from the oscillator amplifier.
V_{SS}	16		-		-	Ground.

All information provided in this document is subject to legal disclaimers.

© NXP B.V. 2012. All rights reserved.

[1] Pin state at reset for default function: I = Input; O = Output; PU = internal pull-up enabled (pins pulled up to full V_{DD} level); IA = inactive, no pull-up/down enabled.

[2] See Figure 48 for the reset pad configuration. $\overline{\text{RESET}}$ functionality is not available in Deep power-down mode. Use the WAKEUP pin to reset the chip and wake up from Deep power-down mode. An external pull-up resistor is required on this pin for the Deep power-down mode.

[3] 5 V tolerant pad providing digital I/O functions with configurable pull-up/pull-down resistors and configurable hysteresis (see Figure 47).

[4] I^2C-bus pads compliant with the I^2C-bus specification for I^2C standard mode and I^2C Fast-mode Plus.

[5] 5 V tolerant pad providing digital I/O functions with configurable pull-up/pull-down resistors, configurable hysteresis, and analog input. When configured as a ADC input, digital section of the pad is disabled and the pin is not 5 V tolerant (see Figure 47).

[6] When the system oscillator is not used, connect XTALIN and XTALOUT as follows: XTALIN can be left floating or can be grounded (grounding is preferred to reduce susceptibility to noise). XTALOUT should be left floating.

Table 5. LPC1100L series: LPC1112 pin description table (TSSOP20 with V_{DDA} and V_{SSA} pins)

Symbol	Pin TSSOP20		Start logic input	Type	Reset state [1]	Description
PIO0_0 to PIO0_11				I/O		**Port 0 —** Port 0 is a 12-bit I/O port with individual direction and function controls for each bit. The operation of port 0 pins depends on the function selected through the IOCONFIG register block.
$\overline{\text{RESET}}$/PIO0_0	17	[2]	yes	I	I; PU	**$\overline{\text{RESET}}$ —** External reset input with 20 ns glitch filter. A LOW-going pulse as short as 50 ns on this pin resets the device, causing I/O ports and peripherals to take on their default states, and processor execution to begin at address 0.
				I/O	-	**PIO0_0 —** General purpose digital input/output pin with 10 ns glitch filter.
PIO0_1/CLKOUT/ CT32B0_MAT2	18	[3]	yes	I/O	I; PU	**PIO0_1 —** General purpose digital input/output pin. A LOW level on this pin during reset starts the ISP command handler.
				O	-	**CLKOUT —** Clockout pin.
				O	-	**CT32B0_MAT2 —** Match output 2 for 32-bit timer 0.
PIO0_2/SSEL0/ CT16B0_CAP0	19	[3]	yes	I/O	I; PU	**PIO0_2 —** General purpose digital input/output pin.
				I/O	-	**SSEL0 —** Slave Select for SPI0.
				I	-	**CT16B0_CAP0 —** Capture input 0 for 16-bit timer 0.
PIO0_3	20	[3]	yes	I/O	I; PU	**PIO0_3 —** General purpose digital input/output pin.
PIO0_8/MISO0/ CT16B0_MAT0	1	[3]	yes	I/O	I; PU	**PIO0_8 —** General purpose digital input/output pin.
				I/O	-	**MISO0 —** Master In Slave Out for SPI0.
				O	-	**CT16B0_MAT0 —** Match output 0 for 16-bit timer 0.
PIO0_9/MOSI0/ CT16B0_MAT1	2	[3]	yes	I/O	I; PU	**PIO0_9 —** General purpose digital input/output pin.
				I/O	-	**MOSI0 —** Master Out Slave In for SPI0.
				O	-	**CT16B0_MAT1 —** Match output 1 for 16-bit timer 0.
SWCLK/PIO0_10/ SCK0/ CT16B0_MAT2	3	[3]	yes	I	I; PU	**SWCLK —** Serial wire clock.
				I/O	-	**PIO0_10 —** General purpose digital input/output pin.
				I/O	-	**SCK0 —** Serial clock for SPI0.
				O	-	**CT16B0_MAT2 —** Match output 2 for 16-bit timer 0.

All information provided in this document is subject to legal disclaimers.

© NXP B.V. 2012. All rights reserved.

Table 5. LPC1100L series: LPC1112 pin description table (TSSOP20 with V_{DDA} and V_{SSA} pins) *...continued*

Symbol	Pin TSSOP20		Start logic input	Type	Reset state [1]	Description
R/PIO0_11/ AD0/CT32B0_MAT3	4	[4]	yes	I	I; PU	**R —** Reserved. Configure for an alternate function in the IOCONFIG block.
				I/O	-	**PIO0_11 —** General purpose digital input/output pin.
				I	-	**AD0 —** A/D converter, input 0.
				O	-	**CT32B0_MAT3 —** Match output 3 for 32-bit timer 0.
PIO1_0 to PIO1_7				I/O		**Port 1 —** Port 1 is a 12-bit I/O port with individual direction and function controls for each bit. The operation of port 1 pins depends on the function selected through the IOCONFIG register block.
R/PIO1_0/ AD1/CT32B1_CAP0	7	[4]	yes	I	I; PU	**R —** Reserved. Configure for an alternate function in the IOCONFIG block.
				I/O	-	**PIO1_0 —** General purpose digital input/output pin.
				I	-	**AD1 —** A/D converter, input 1.
				I	-	**CT32B1_CAP0 —** Capture input 0 for 32-bit timer 1.
R/PIO1_1/ AD2/CT32B1_MAT0	8	[4]	no	O	I; PU	**R —** Reserved. Configure for an alternate function in the IOCONFIG block.
				I/O	-	**PIO1_1 —** General purpose digital input/output pin.
				I	-	**AD2 —** A/D converter, input 2.
				O	-	**CT32B1_MAT0 —** Match output 0 for 32-bit timer 1.
R/PIO1_2/ AD3/CT32B1_MAT1	9	[4]	no	I	I; PU	**R —** Reserved. Configure for an alternate function in the IOCONFIG block.
				I/O	-	**PIO1_2 —** General purpose digital input/output pin.
				I	-	**AD3 —** A/D converter, input 3.
				O	-	**CT32B1_MAT1 —** Match output 1 for 32-bit timer 1.
SWDIO/PIO1_3/ AD4/CT32B1_MAT2	10	[4]	no	I/O	I; PU	**SWDIO —** Serial wire debug input/output.
				I/O	-	**PIO1_3 —** General purpose digital input/output pin.
				I	-	**AD4 —** A/D converter, input 4.
				O	-	**CT32B1_MAT2 —** Match output 2 for 32-bit timer 1.
PIO1_6/RXD/ CT32B0_MAT0	11	[3]	no	I/O	I; PU	**PIO1_6 —** General purpose digital input/output pin.
				I	-	**RXD —** Receiver input for UART.
				O	-	**CT32B0_MAT0 —** Match output 0 for 32-bit timer 0.
PIO1_7/TXD/ CT32B0_MAT1	12	[3]	no	I/O	I; PU	**PIO1_7 —** General purpose digital input/output pin.
				O	-	**TXD —** Transmitter output for UART.
				O	-	**CT32B0_MAT1 —** Match output 1 for 32-bit timer 0.
V_{DD}	15		-	I	-	3.3 V supply voltage to the internal regulator and the external rail.
V_{DDA}	5		-	I	-	3.3 V supply voltage to the ADC. Also used as the ADC reference voltage.
XTALIN	14	[5]	-	I	-	Input to the oscillator circuit and internal clock generator circuits. Input voltage must not exceed 1.8 V.

All information provided in this document is subject to legal disclaimers.

© NXP B.V. 2012. All rights reserved.

Table 5. LPC1100L series: LPC1112 pin description table (TSSOP20 with V_{DDA} and V_{SSA} pins) *...continued*

Symbol	Pin TSSOP20	Start logic input	Type	Reset state [1]	Description
XTALOUT	13 [5]	-	O	-	Output from the oscillator amplifier.
V_{SS}	16	-	I	-	Ground.
V_{SSA}	6	-	I	-	Analog ground.

[1] Pin state at reset for default function: I = Input; O = Output; PU = internal pull-up enabled (pins pulled up to full V_{DD} level); IA = inactive, no pull-up/down enabled.

[2] See Figure 48 for the reset pad configuration. $\overline{\text{RESET}}$ functionality is not available in Deep power-down mode. Use the WAKEUP pin to reset the chip and wake up from Deep power-down mode. An external pull-up resistor is required on this pin for the Deep power-down mode.

[3] 5 V tolerant pad providing digital I/O functions with configurable pull-up/pull-down resistors and configurable hysteresis (see Figure 47).

[4] 5 V tolerant pad providing digital I/O functions with configurable pull-up/pull-down resistors, configurable hysteresis, and analog input. When configured as a ADC input, digital section of the pad is disabled and the pin is not 5 V tolerant (see Figure 47).

[5] When the system oscillator is not used, connect XTALIN and XTALOUT as follows: XTALIN can be left floating or can be grounded (grounding is preferred to reduce susceptibility to noise). XTALOUT should be left floating.

Table 6. LPC1100L series: LPC1112 (HVQFN24 package)

Symbol	HVQFN pin	Start logic input	Type	Reset state [1]	Description
$\overline{\text{RESET}}$/PIO0_0	1[2]	yes	I	I; PU	**$\overline{\text{RESET}}$ —** External reset input with 20 ns glitch filter. A LOW-going pulse as short as 50 ns on this pin resets the device, causing I/O ports and peripherals to take on their default states, and processor execution to begin at address 0.
			I/O	-	**PIO0_0 —** General purpose digital input/output pin with 10 ns glitch filter.
PIO0_1/CLKOUT/ CT32B0_MAT2	2[3]	yes	I/O	I; PU	**PIO0_1 —** General purpose digital input/output pin. A LOW level on this pin during reset starts the ISP command handler.
			O	-	**CLKOUT —** Clockout pin.
			O	-	**CT32B0_MAT2 —** Match output 2 for 32-bit timer 0.
PIO0_2/SSEL0/ CT16B0_CAP0	7[3]	yes	I/O	I; PU	**PIO0_2 —** General purpose digital input/output pin.
			I/O	-	**SSEL0 —** Slave Select for SPI0.
			I	-	**CT16B0_CAP0 —** Capture input 0 for 16-bit timer 0.
PIO0_4/SCL	8[4]	yes	I/O	I; IA	**PIO0_4 —** General purpose digital input/output pin (open-drain).
			I/O	-	**SCL —** I^2C-bus, open-drain clock input/output. High-current sink only if I^2C Fast-mode Plus is selected in the I/O configuration register.
PIO0_5/SDA	9[4]	yes	I/O	I; IA	**PIO0_5 —** General purpose digital input/output pin (open-drain).
			I/O	-	**SDA —** I^2C-bus, open-drain data input/output. High-current sink only if I^2C Fast-mode Plus is selected in the I/O configuration register.
PIO0_6/SCK0	10[3]	yes	I/O	I; PU	**PIO0_6 —** General purpose digital input/output pin.
			I/O	-	**SCK0 —** Serial clock for SPI0.

All information provided in this document is subject to legal disclaimers.

© NXP B.V. 2012. All rights reserved.

Table 6. LPC1100L series: LPC1112 (HVQFN24 package) *...continued*

Symbol	HVQFN pin	Start logic input	Type	Reset state [1]	Description
PIO0_7/$\overline{\text{CTS}}$	11[3]	yes	I/O	I; PU	**PIO0_7 —** General purpose digital input/output pin (high-current output driver).
			I	-	**$\overline{\text{CTS}}$ —** Clear To Send input for UART.
PIO0_8/MISO0/ CT16B0_MAT0	12[3]	yes	I/O	I; PU	**PIO0_8 —** General purpose digital input/output pin.
			I/O	-	**MISO0 —** Master In Slave Out for SPI0.
			O	-	**CT16B0_MAT0 —** Match output 0 for 16-bit timer 0.
PIO0_9/MOSI0/ CT16B0_MAT1	13[3]	yes	I/O	I; PU	**PIO0_9 —** General purpose digital input/output pin.
			I/O	-	**MOSI0 —** Master Out Slave In for SPI0.
			O	-	**CT16B0_MAT1 —** Match output 1 for 16-bit timer 0.
SWCLK/PIO0_10/ SCK0/ CT16B0_MAT2	14[3]	yes	I	I; PU	**SWCLK —** Serial wire clock.
			I/O	-	**PIO0_10 —** General purpose digital input/output pin.
			I/O	-	**SCK0 —** Serial clock for SPI0.
			O	-	**CT16B0_MAT2 —** Match output 2 for 16-bit timer 0.
R/PIO0_11/ AD0/CT32B0_MAT3	15[5]	yes	I	I; PU	**R —** Reserved. Configure for an alternate function in the IOCONFIG block.
			I/O	-	**PIO0_11 —** General purpose digital input/output pin.
			I	-	**AD0 —** A/D converter, input 0.
			O	-	**CT32B0_MAT3 —** Match output 3 for 32-bit timer 0.
R/PIO1_0/ AD1/CT32B1_CAP0	16[5]	yes	I	I; PU	**R —** Reserved. Configure for an alternate function in the IOCONFIG block.
			I/O	-	**PIO1_0 —** General purpose digital input/output pin.
			I	-	**AD1 —** A/D converter, input 1.
			I	-	**CT32B1_CAP0 —** Capture input 0 for 32-bit timer 1.
R/PIO1_1/ AD2/CT32B1_MAT0	17[5]	no	O	I; PU	**R —** Reserved. Configure for an alternate function in the IOCONFIG block.
			I/O	-	**PIO1_1 —** General purpose digital input/output pin.
			I	-	**AD2 —** A/D converter, input 2.
			O	-	**CT32B1_MAT0 —** Match output 0 for 32-bit timer 1.
R/PIO1_2/ AD3/CT32B1_MAT1	18[5]	no	I	I; PU	**R —** Reserved. Configure for an alternate function in the IOCONFIG block.
			I/O	-	**PIO1_2 —** General purpose digital input/output pin.
			I	-	**AD3 —** A/D converter, input 3.
			O	-	**CT32B1_MAT1 —** Match output 1 for 32-bit timer 1.
SWDIO/PIO1_3/ AD4/CT32B1_MAT2	19[5]	no	I/O	I; PU	**SWDIO —** Serial wire debug input/output.
			I/O	-	**PIO1_3 —** General purpose digital input/output pin.
			I	-	**AD4 —** A/D converter, input 4.
			O	-	**CT32B1_MAT2 —** Match output 2 for 32-bit timer 1.

All information provided in this document is subject to legal disclaimers.

© NXP B.V. 2012. All rights reserved.

Table 6. LPC1100L series: LPC1112 (HVQFN24 package) *...continued*

Symbol	HVQFN pin	Start logic input	Type	Reset state [1]	Description
PIO1_4/AD5/ CT32B1_MAT3/ WAKEUP	20[5]	no	I/O	I; PU	**PIO1_4 —** General purpose digital input/output pin with 10 ns glitch filter.
			I	-	**AD5 —** A/D converter, input 5.
			O	-	**CT32B1_MAT3 —** Match output 3 for 32-bit timer 1.
			I	-	**WAKEUP —** Deep power-down mode wake-up pin with 20 ns glitch filter. This pin must be pulled HIGH externally to enter Deep power-down mode and pulled LOW to exit Deep power-down mode. A LOW-going pulse as short as 50 ns wakes up the part.
PIO1_6/RXD/ CT32B0_MAT0	23[3]	no	I/O	I; PU	**PIO1_6 —** General purpose digital input/output pin.
			I	-	**RXD —** Receiver input for UART.
			O	-	**CT32B0_MAT0 —** Match output 0 for 32-bit timer 0.
PIO1_7/TXD/ CT32B0_MAT1	24[3]	no	I/O	I; PU	**PIO1_7 —** General purpose digital input/output pin.
			O	-	**TXD —** Transmitter output for UART.
			O	-	**CT32B0_MAT1 —** Match output 1 for 32-bit timer 0.
PIO1_8/ CT16B1_CAP0	6[3]	no	I/O	I; PU	**PIO1_8 —** General purpose digital input/output pin.
			I	-	**CT16B1_CAP0 —** Capture input 0 for 16-bit timer 1.
XTALIN	4[6]	-	I	-	Input to the oscillator circuit and internal clock generator circuits. Input voltage must not exceed 1.8 V.
V_{DD}	5; 22	-	I	-	1.8 V supply voltage to the internal regulator, the external rail, and the ADC. Also used as the ADC reference voltage.
V_{SS}	3; 21	-	I	-	Ground.

[1] Pin state at reset for default function: I = Input; O = Output; PU = internal pull-up enabled (pins pulled up to full V_{DD} level); IA = inactive, no pull-up/down enabled.

[2] See Figure 48 for the reset pad configuration. $\overline{\text{RESET}}$ functionality is not available in Deep power-down mode. Use the WAKEUP pin to reset the chip and wake up from Deep power-down mode. An external pull-up resistor is required on this pin for the Deep power-down mode.

[3] Pad providing digital I/O functions with configurable pull-up/pull-down resistors and configurable hysteresis (see Figure 47).

[4] I^2C-bus pads compliant with the I^2C-bus specification for I^2C standard mode and I^2C Fast-mode Plus.

[5] Pad providing digital I/O functions with configurable pull-up/pull-down resistors, configurable hysteresis, and analog input. When configured as a ADC input, digital section of the pad is disabled (see Figure 47).

[6] When the system oscillator is not used, connect XTALIN and XTALOUT as follows: XTALIN can be left floating or can be grounded (grounding is preferred to reduce susceptibility to noise). XTALOUT should be left floating.

All information provided in this document is subject to legal disclaimers.

© NXP B.V. 2012. All rights reserved.

Table 7. LPC1100L series: LPC1112/14 pin description table (TSSOP28 and DIP28 packages)

Symbol	Pin TSSOP28/ DIP28		Start logic input	Type	Reset state [1]	Description
PIO0_0 to PIO0_11				I/O		**Port 0 —** Port 0 is a 12-bit I/O port with individual direction and function controls for each bit. The operation of port 0 pins depends on the function selected through the IOCONFIG register block.
$\overline{\text{RESET}}$/PIO0_0	23	[2]	yes	I	I; PU	**$\overline{\text{RESET}}$ —** External reset input with 20 ns glitch filter. A LOW-going pulse as short as 50 ns on this pin resets the device, causing I/O ports and peripherals to take on their default states, and processor execution to begin at address 0.
				I/O	-	**PIO0_0 —** General purpose digital input/output pin with 10 ns glitch filter.
PIO0_1/CLKOUT/ CT32B0_MAT2	24	[3]	yes	I/O	I; PU	**PIO0_1 —** General purpose digital input/output pin. A LOW level on this pin during reset starts the ISP command handler.
				O	-	**CLKOUT —** Clockout pin.
				O	-	**CT32B0_MAT2 —** Match output 2 for 32-bit timer 0.
PIO0_2/SSEL0/ CT16B0_CAP0	25	[3]	yes	I/O	I; PU	**PIO0_2 —** General purpose digital input/output pin.
				I/O	-	**SSEL0 —** Slave Select for SPI0.
				I	-	**CT16B0_CAP0 —** Capture input 0 for 16-bit timer 0.
PIO0_3	26	[3]	yes	I/O	I; PU	**PIO0_3 —** General purpose digital input/output pin.
PIO0_4/SCL	27	[4]	yes	I/O	I; IA	**PIO0_4 —** General purpose digital input/output pin (open-drain).
				I/O	-	**SCL —** I^2C-bus, open-drain clock input/output. High-current sink only if I^2C Fast-mode Plus is selected in the I/O configuration register.
PIO0_5/SDA	5	[4]	yes	I/O	I; IA	**PIO0_5 —** General purpose digital input/output pin (open-drain).
				I/O	-	**SDA —** I^2C-bus, open-drain data input/output. High-current sink only if I^2C Fast-mode Plus is selected in the I/O configuration register.
PIO0_6/SCK0	6	[3]	yes	I/O	I; PU	**PIO0_6 —** General purpose digital input/output pin.
				I/O	-	**SCK0 —** Serial clock for SPI0.
PIO0_7/$\overline{\text{CTS}}$	28	[3]	yes	I/O	I; PU	**PIO0_7 —** General purpose digital input/output pin (high-current output driver).
				I	-	**$\overline{\text{CTS}}$ —** Clear To Send input for UART.
PIO0_8/MISO0/ CT16B0_MAT0	1	[3]	yes	I/O	I; PU	**PIO0_8 —** General purpose digital input/output pin.
				I/O	-	**MISO0 —** Master In Slave Out for SPI0.
				O	-	**CT16B0_MAT0 —** Match output 0 for 16-bit timer 0.
PIO0_9/MOSI0/ CT16B0_MAT1	2	[3]	yes	I/O	I; PU	**PIO0_9 —** General purpose digital input/output pin.
				I/O	-	**MOSI0 —** Master Out Slave In for SPI0.
				O	-	**CT16B0_MAT1 —** Match output 1 for 16-bit timer 0.
SWCLK/PIO0_10/ SCK0/ CT16B0_MAT2	3	[3]	yes	I	I; PU	**SWCLK —** Serial wire clock.
				I/O	-	**PIO0_10 —** General purpose digital input/output pin.
				I/O	-	**SCK0 —** Serial clock for SPI0.
				O	-	**CT16B0_MAT2 —** Match output 2 for 16-bit timer 0.

All information provided in this document is subject to legal disclaimers.

© NXP B.V. 2012. All rights reserved.

Table 7. LPC1100L series: LPC1112/14 pin description table (TSSOP28 and DIP28 packages) *...continued*

Symbol	Pin TSSOP28/ DIP28		Start logic input	Type	Reset state [1]	Description
R/PIO0_11/ AD0/CT32B0_MAT3	4	[5]	yes	I	I; PU	**R —** Reserved. Configure for an alternate function in the IOCONFIG block.
				I/O	-	**PIO0_11 —** General purpose digital input/output pin.
				I	-	**AD0 —** A/D converter, input 0.
				O	-	**CT32B0_MAT3 —** Match output 3 for 32-bit timer 0.
PIO1_0 to PIO1_9				I/O		**Port 1 —** Port 1 is a 12-bit I/O port with individual direction and function controls for each bit. The operation of port 1 pins depends on the function selected through the IOCONFIG register block.
R/PIO1_0/ AD1/CT32B1_CAP0	9	[5]	yes	I	I; PU	**R —** Reserved. Configure for an alternate function in the IOCONFIG block.
				I/O	-	**PIO1_0 —** General purpose digital input/output pin.
				I	-	**AD1 —** A/D converter, input 1.
				I	-	**CT32B1_CAP0 —** Capture input 0 for 32-bit timer 1.
R/PIO1_1/ AD2/CT32B1_MAT0	10	[5]	no	O	I; PU	**R —** Reserved. Configure for an alternate function in the IOCONFIG block.
				I/O	-	**PIO1_1 —** General purpose digital input/output pin.
				I	-	**AD2 —** A/D converter, input 2.
				O	-	**CT32B1_MAT0 —** Match output 0 for 32-bit timer 1.
R/PIO1_2/ AD3/CT32B1_MAT1	11	[5]	no	I	I; PU	**R —** Reserved. Configure for an alternate function in the IOCONFIG block.
				I/O	-	**PIO1_2 —** General purpose digital input/output pin.
				I	-	**AD3 —** A/D converter, input 3.
				O	-	**CT32B1_MAT1 —** Match output 1 for 32-bit timer 1.
SWDIO/PIO1_3/ AD4/CT32B1_MAT2	12	[5]	no	I/O	I; PU	**SWDIO —** Serial wire debug input/output.
				I/O	-	**PIO1_3 —** General purpose digital input/output pin.
				I	-	**AD4 —** A/D converter, input 4.
				O	-	**CT32B1_MAT2 —** Match output 2 for 32-bit timer 1.
PIO1_4/AD5/ CT32B1_MAT3/ WAKEUP	13	[5]	no	I/O	I; PU	**PIO1_4 —** General purpose digital input/output pin with 10 ns glitch filter.
				I	-	**AD5 —** A/D converter, input 5.
				O	-	**CT32B1_MAT3 —** Match output 3 for 32-bit timer 1.
				I	-	**WAKEUP —** Deep power-down mode wake-up pin with 20 ns glitch filter. This pin must be pulled HIGH externally to enter Deep power-down mode and pulled LOW to exit Deep power-down mode. A LOW-going pulse as short as 50 ns wakes up the part.
PIO1_5/$\overline{\text{RTS}}$/ CT32B0_CAP0	14	[3]	no	I/O	I; PU	**PIO1_5 —** General purpose digital input/output pin.
				O	-	**$\overline{\text{RTS}}$ —** Request To Send output for UART.
				I	-	**CT32B0_CAP0 —** Capture input 0 for 32-bit timer 0.

All information provided in this document is subject to legal disclaimers.

© NXP B.V. 2012. All rights reserved.

Table 7. LPC1100L series: LPC1112/14 pin description table (TSSOP28 and DIP28 packages) *...continued*

Symbol	Pin TSSOP28/ DIP28		Start logic input	Type	Reset state [1]	Description
PIO1_6/RXD/ CT32B0_MAT0	15	[3]	no	I/O	I; PU	**PIO1_6 —** General purpose digital input/output pin.
				I	-	**RXD —** Receiver input for UART.
				O	-	**CT32B0_MAT0 —** Match output 0 for 32-bit timer 0.
PIO1_7/TXD/ CT32B0_MAT1	16	[3]	no	I/O	I; PU	**PIO1_7 —** General purpose digital input/output pin.
				O	-	**TXD —** Transmitter output for UART.
				O	-	**CT32B0_MAT1 —** Match output 1 for 32-bit timer 0.
PIO1_8/ CT16B1_CAP0	17	[3]	no	I/O	I; PU	**PIO1_8 —** General purpose digital input/output pin.
				I	-	**CT16B1_CAP0 —** Capture input 0 for 16-bit timer 1.
PIO1_9/ CT16B1_MAT0	18	[3]	no	I/O	I; PU	**PIO1_9 —** General purpose digital input/output pin.
				O	-	**CT16B1_MAT0 —** Match output 0 for 16-bit timer 1.
V_{DD}	21		-		-	3.3 V supply voltage to the internal regulator and the external rail.
V_{DDA}	7		-	-	-	3.3 V supply voltage to the ADC. Also used as the ADC reference voltage.
XTALIN	20	[6]	-	I	-	Input to the oscillator circuit and internal clock generator circuits. Input voltage must not exceed 1.8 V.
XTALOUT	19	[6]	-	O	-	Output from the oscillator amplifier.
V_{SS}	22		-		-	Ground.
V_{SSA}	8		-	-	-	Analog ground.

[1] Pin state at reset for default function: I = Input; O = Output; PU = internal pull-up enabled (pins pulled up to full V_{DD} level); IA = inactive, no pull-up/down enabled.

[2] See Figure 48 for the reset pad configuration. $\overline{\text{RESET}}$ functionality is not available in Deep power-down mode. Use the WAKEUP pin to reset the chip and wake up from Deep power-down mode. An external pull-up resistor is required on this pin for the Deep power-down mode.

[3] 5 V tolerant pad providing digital I/O functions with configurable pull-up/pull-down resistors and configurable hysteresis (see Figure 47).

[4] I^2C-bus pads compliant with the I^2C-bus specification for I^2C standard mode and I^2C Fast-mode Plus.

[5] 5 V tolerant pad providing digital I/O functions with configurable pull-up/pull-down resistors, configurable hysteresis, and analog input. When configured as a ADC input, digital section of the pad is disabled and the pin is not 5 V tolerant (see Figure 47).

[6] When the system oscillator is not used, connect XTALIN and XTALOUT as follows: XTALIN can be left floating or can be grounded (grounding is preferred to reduce susceptibility to noise). XTALOUT should be left floating.

All information provided in this document is subject to legal disclaimers.

© NXP B.V. 2012. All rights reserved.

Table 8. LPC1100 and LPC1100L series: LPC1113/14 pin description table (LQFP48 package)

Symbol	Pin	Start logic input	Type	Reset state [1]	Description
PIO0_0 to PIO0_11			I/O		**Port 0 —** Port 0 is a 12-bit I/O port with individual direction and function controls for each bit. The operation of port 0 pins depends on the function selected through the IOCONFIG register block.
$\overline{\text{RESET}}$/PIO0_0	3[2]	yes	I	I; PU	**$\overline{\text{RESET}}$ —** External reset input with 20 ns glitch filter. A LOW-going pulse as short as 50 ns on this pin resets the device, causing I/O ports and peripherals to take on their default states, and processor execution to begin at address 0.
			I/O	-	**PIO0_0 —** General purpose digital input/output pin with 10 ns glitch filter.
PIO0_1/CLKOUT/ CT32B0_MAT2	4[3]	yes	I/O	I; PU	**PIO0_1 —** General purpose digital input/output pin. A LOW level on this pin during reset starts the ISP command handler.
			O	-	**CLKOUT —** Clockout pin.
			O	-	**CT32B0_MAT2 —** Match output 2 for 32-bit timer 0.
PIO0_2/SSEL0/ CT16B0_CAP0	10[3]	yes	I/O	I; PU	**PIO0_2 —** General purpose digital input/output pin.
			I/O	-	**SSEL0 —** Slave Select for SPI0.
			I	-	**CT16B0_CAP0 —** Capture input 0 for 16-bit timer 0.
PIO0_3	14[3]	yes	I/O	I; PU	**PIO0_3 —** General purpose digital input/output pin.
PIO0_4/SCL	15[4]	yes	I/O	I; IA	**PIO0_4 —** General purpose digital input/output pin (open-drain).
			I/O	-	**SCL —** I^2C-bus, open-drain clock input/output. High-current sink only if I^2C Fast-mode Plus is selected in the I/O configuration register.
PIO0_5/SDA	16[4]	yes	I/O	I; IA	**PIO0_5 —** General purpose digital input/output pin (open-drain).
			I/O	-	**SDA —** I^2C-bus, open-drain data input/output. High-current sink only if I^2C Fast-mode Plus is selected in the I/O configuration register.
PIO0_6/SCK0	22[3]	yes	I/O	I; PU	**PIO0_6 —** General purpose digital input/output pin.
			I/O	-	**SCK0 —** Serial clock for SPI0.
PIO0_7/$\overline{\text{CTS}}$	23[3]	yes	I/O	I; PU	**PIO0_7 —** General purpose digital input/output pin (high-current output driver).
			I	-	**$\overline{\text{CTS}}$ —** Clear To Send input for UART.
PIO0_8/MISO0/ CT16B0_MAT0	27[3]	yes	I/O	I; PU	**PIO0_8 —** General purpose digital input/output pin.
			I/O	-	**MISO0 —** Master In Slave Out for SPI0.
			O	-	**CT16B0_MAT0 —** Match output 0 for 16-bit timer 0.
PIO0_9/MOSI0/ CT16B0_MAT1	28[3]	yes	I/O	I; PU	**PIO0_9 —** General purpose digital input/output pin.
			I/O	-	**MOSI0 —** Master Out Slave In for SPI0.
			O	-	**CT16B0_MAT1 —** Match output 1 for 16-bit timer 0.
SWCLK/PIO0_10/ SCK0/ CT16B0_MAT2	29[3]	yes	I	I; PU	**SWCLK —** Serial wire clock.
			I/O	-	**PIO0_10 —** General purpose digital input/output pin.
			I/O	-	**SCK0 —** Serial clock for SPI0.
			O	-	**CT16B0_MAT2 —** Match output 2 for 16-bit timer 0.

All information provided in this document is subject to legal disclaimers.

© NXP B.V. 2012. All rights reserved.

Table 8. LPC1100 and LPC1100L series: LPC1113/14 pin description table (LQFP48 package) *...continued*

Symbol	Pin	Start logic input	Type	Reset state [1]	Description
R/PIO0_11/ AD0/CT32B0_MAT3	32[5]	yes	I	I; PU	**R —** Reserved. Configure for an alternate function in the IOCONFIG block.
			I/O	-	**PIO0_11 —** General purpose digital input/output pin.
			I	-	**AD0 —** A/D converter, input 0.
			O	-	**CT32B0_MAT3 —** Match output 3 for 32-bit timer 0.
PIO1_0 to PIO1_11			I/O		**Port 1 —** Port 1 is a 12-bit I/O port with individual direction and function controls for each bit. The operation of port 1 pins depends on the function selected through the IOCONFIG register block.
R/PIO1_0/ AD1/CT32B1_CAP0	33[5]	yes	I	I; PU	**R —** Reserved. Configure for an alternate function in the IOCONFIG block.
			I/O	-	**PIO1_0 —** General purpose digital input/output pin.
			I	-	**AD1 —** A/D converter, input 1.
			I	-	**CT32B1_CAP0 —** Capture input 0 for 32-bit timer 1.
R/PIO1_1/ AD2/CT32B1_MAT0	34[5]	no	O	I; PU	**R —** Reserved. Configure for an alternate function in the IOCONFIG block.
			I/O	-	**PIO1_1 —** General purpose digital input/output pin.
			I	-	**AD2 —** A/D converter, input 2.
			O	-	**CT32B1_MAT0 —** Match output 0 for 32-bit timer 1.
R/PIO1_2/ AD3/CT32B1_MAT1	35[5]	no	I	I; PU	**R —** Reserved. Configure for an alternate function in the IOCONFIG block.
			I/O	-	**PIO1_2 —** General purpose digital input/output pin.
			I	-	**AD3 —** A/D converter, input 3.
			O	-	**CT32B1_MAT1 —** Match output 1 for 32-bit timer 1.
SWDIO/PIO1_3/ AD4/CT32B1_MAT2	39[5]	no	I/O	I; PU	**SWDIO —** Serial wire debug input/output.
			I/O	-	**PIO1_3 —** General purpose digital input/output pin.
			I	-	**AD4 —** A/D converter, input 4.
			O	-	**CT32B1_MAT2 —** Match output 2 for 32-bit timer 1.
PIO1_4/AD5/ CT32B1_MAT3/ WAKEUP	40[5]	no	I/O	I; PU	**PIO1_4 —** General purpose digital input/output pin with 10 ns glitch filter.
			I	-	**AD5 —** A/D converter, input 5.
			O	-	**CT32B1_MAT3 —** Match output 3 for 32-bit timer 1.
			I	-	**WAKEUP —** Deep power-down mode wake-up pin with 20 ns glitch filter. This pin must be pulled HIGH externally to enter Deep power-down mode and pulled LOW to exit Deep power-down mode. A LOW-going pulse as short as 50 ns wakes up the part.
PIO1_5/$\overline{\text{RTS}}$/ CT32B0_CAP0	45[3]	no	I/O	I; PU	**PIO1_5 —** General purpose digital input/output pin.
			O	-	**$\overline{\text{RTS}}$ —** Request To Send output for UART.
			I	-	**CT32B0_CAP0 —** Capture input 0 for 32-bit timer 0.
PIO1_6/RXD/ CT32B0_MAT0	46[3]	no	I/O	I; PU	**PIO1_6 —** General purpose digital input/output pin.
			I	-	**RXD —** Receiver input for UART.
			O	-	**CT32B0_MAT0 —** Match output 0 for 32-bit timer 0.

All information provided in this document is subject to legal disclaimers.

© NXP B.V. 2012. All rights reserved.

Table 8. LPC1100 and LPC1100L series: LPC1113/14 pin description table (LQFP48 package) *...continued*

Symbol	Pin	Start logic input	Type	Reset state [1]	Description
PIO1_7/TXD/ CT32B0_MAT1	47[3]	no	I/O	I; PU	**PIO1_7 —** General purpose digital input/output pin.
			O	-	**TXD —** Transmitter output for UART.
			O	-	**CT32B0_MAT1 —** Match output 1 for 32-bit timer 0.
PIO1_8/ CT16B1_CAP0	9[3]	no	I/O	I; PU	**PIO1_8 —** General purpose digital input/output pin.
			I	-	**CT16B1_CAP0 —** Capture input 0 for 16-bit timer 1.
PIO1_9/ CT16B1_MAT0	17[3]	no	I/O	I; PU	**PIO1_9 —** General purpose digital input/output pin.
			O	-	**CT16B1_MAT0 —** Match output 0 for 16-bit timer 1.
PIO1_10/AD6/ CT16B1_MAT1	30[5]	no	I/O	I; PU	**PIO1_10 —** General purpose digital input/output pin.
			I	-	**AD6 —** A/D converter, input 6.
			O	-	**CT16B1_MAT1 —** Match output 1 for 16-bit timer 1.
PIO1_11/AD7	42[5]	no	I/O	I; PU	**PIO1_11 —** General purpose digital input/output pin.
			I	-	**AD7 —** A/D converter, input 7.
PIO2_0 to PIO2_11			I/O		**Port 2 —** Port 2 is a 12-bit I/O port with individual direction and function controls for each bit. The operation of port 2 pins depends on the function selected through the IOCONFIG register block.
PIO2_0/$\overline{\text{DTR}}$/SSEL1	2[3]	no	I/O	I; PU	**PIO2_0 —** General purpose digital input/output pin.
			O	-	**$\overline{\text{DTR}}$ —** Data Terminal Ready output for UART.
			I/O	-	**SSEL1 —** Slave Select for SPI1.
PIO2_1/$\overline{\text{DSR}}$/SCK1	13[3]	no	I/O	I; PU	**PIO2_1 —** General purpose digital input/output pin.
			I	-	**$\overline{\text{DSR}}$ —** Data Set Ready input for UART.
			I/O	-	**SCK1 —** Serial clock for SPI1.
PIO2_2/$\overline{\text{DCD}}$/MISO1	26[3]	no	I/O	I; PU	**PIO2_2 —** General purpose digital input/output pin.
			I	-	**$\overline{\text{DCD}}$ —** Data Carrier Detect input for UART.
			I/O	-	**MISO1 —** Master In Slave Out for SPI1.
PIO2_3/$\overline{\text{RI}}$/MOSI1	38[3]	no	I/O	I; PU	**PIO2_3 —** General purpose digital input/output pin.
			I	-	**$\overline{\text{RI}}$ —** Ring Indicator input for UART.
			I/O	-	**MOSI1 —** Master Out Slave In for SPI1.
PIO2_4	19[3]	no	I/O	I; PU	**PIO2_4 —** General purpose digital input/output pin.
PIO2_5	20[3]	no	I/O	I; PU	**PIO2_5 —** General purpose digital input/output pin.
PIO2_6	1[3]	no	I/O	I; PU	**PIO2_6 —** General purpose digital input/output pin.
PIO2_7	11[3]	no	I/O	I; PU	**PIO2_7 —** General purpose digital input/output pin.
PIO2_8	12[3]	no	I/O	I; PU	**PIO2_8 —** General purpose digital input/output pin.
PIO2_9	24[3]	no	I/O	I; PU	**PIO2_9 —** General purpose digital input/output pin.
PIO2_10	25[3]	no	I/O	I; PU	**PIO2_10 —** General purpose digital input/output pin.
PIO2_11/SCK0	31[3]	no	I/O	I; PU	**PIO2_11 —** General purpose digital input/output pin.
			I/O	-	**SCK0 —** Serial clock for SPI0.
PIO3_0 to PIO3_5			I/O		**Port 3 —** Port 3 is a 12-bit I/O port with individual direction and function controls for each bit. The operation of port 3 pins depends on the function selected through the IOCONFIG register block. Pins PIO3_6 to PIO3_11 are not available.

All information provided in this document is subject to legal disclaimers.

© NXP B.V. 2012. All rights reserved.

Table 8. LPC1100 and LPC1100L series: LPC1113/14 pin description table (LQFP48 package) *...continued*

Symbol	Pin	Start logic input	Type	Reset state [1]	Description
PIO3_0/$\overline{DTR}$	36[3]	no	I/O	I; PU	**PIO3_0 —** General purpose digital input/output pin.
			O	-	**$\overline{DTR}$ —** Data Terminal Ready output for UART.
PIO3_1/$\overline{DSR}$	37[3]	no	I/O	I; PU	**PIO3_1 —** General purpose digital input/output pin.
			I	-	**$\overline{DSR}$ —** Data Set Ready input for UART.
PIO3_2/$\overline{DCD}$	43[3]	no	I/O	I; PU	**PIO3_2 —** General purpose digital input/output pin.
			I	-	**$\overline{DCD}$ —** Data Carrier Detect input for UART.
PIO3_3/$\overline{RI}$	48[3]	no	I/O	I; PU	**PIO3_3 —** General purpose digital input/output pin.
			I	-	**$\overline{RI}$ —** Ring Indicator input for UART.
PIO3_4	18[3]	no	I/O	I; PU	**PIO3_4 —** General purpose digital input/output pin.
PIO3_5	21[3]	no	I/O	I; PU	**PIO3_5 —** General purpose digital input/output pin.
V_{DD}	8; 44	-	I	-	3.3 V supply voltage to the internal regulator, the external rail, and the ADC. Also used as the ADC reference voltage.
XTALIN	6[6]	-	I	-	Input to the oscillator circuit and internal clock generator circuits. Input voltage must not exceed 1.8 V.
XTALOUT	7[6]	-	O	-	Output from the oscillator amplifier.
V_{SS}	5; 41	-	I	-	Ground.

[1] Pin state at reset for default function: I = Input; O = Output; PU = internal pull-up enabled (pins pulled up to 2.6 V for LPC111x/101/201/301, pins pulled up to full V_{DD} level on LPC111x/002/102/202/302 (V_{DD} = 3.3 V)); IA = inactive, no pull-up/down enabled.

[2] See Figure 48 for the reset pad configuration. $\overline{RESET}$ functionality is not available in Deep power-down mode. Use the WAKEUP pin to reset the chip and wake up from Deep power-down mode. An external pull-up resistor is required on this pin for the Deep power-down mode.

[3] 5 V tolerant pad providing digital I/O functions with configurable pull-up/pull-down resistors and configurable hysteresis (see Figure 47).

[4] I^2C-bus pads compliant with the I^2C-bus specification for I^2C standard mode and I^2C Fast-mode Plus.

[5] 5 V tolerant pad providing digital I/O functions with configurable pull-up/pull-down resistors, configurable hysteresis, and analog input. When configured as a ADC input, digital section of the pad is disabled and the pin is not 5 V tolerant (see Figure 47).

[6] When the system oscillator is not used, connect XTALIN and XTALOUT as follows: XTALIN can be left floating or can be grounded (grounding is preferred to reduce susceptibility to noise). XTALOUT should be left floating.

Table 9. LPC1100 and LPC1100L series: LPC1111/12/13/14 pin description table (HVQFN33 package)

Symbol	Pin	Start logic input	Type	Reset state [1]	Description
PIO0_0 to PIO0_11					**Port 0 —** Port 0 is a 12-bit I/O port with individual direction and function controls for each bit. The operation of port 0 pins depends on the function selected through the IOCONFIG register block.
$\overline{RESET}$/PIO0_0	2[2]	yes	I	I;PU	**$\overline{RESET}$ —** External reset input with 20 ns glitch filter. A LOW-going pulse as short as 50 ns on this pin resets the device, causing I/O ports and peripherals to take on their default states and processor execution to begin at address 0.
			I/O	-	**PIO0_0 —** General purpose digital input/output pin with 10 ns glitch filter.

All information provided in this document is subject to legal disclaimers.

© NXP B.V. 2012. All rights reserved.

Table 9. LPC1100 and LPC1100L series: LPC1111/12/13/14 pin description table (HVQFN33 package) *...continued*

Symbol	Pin	Start logic input	Type	Reset state [1]	Description
PIO0_1/CLKOUT/ CT32B0_MAT2	3[3]	yes	I/O	I;PU	**PIO0_1 —** General purpose digital input/output pin. A LOW level on this pin during reset starts the ISP command handler.
			O	-	**CLKOUT —** Clock out pin.
			O	-	**CT32B0_MAT2 —** Match output 2 for 32-bit timer 0.
PIO0_2/SSEL0/ CT16B0_CAP0	8[3]	yes	I/O	I;PU	**PIO0_2 —** General purpose digital input/output pin.
			I/O	-	**SSEL0 —** Slave select for SPI0.
			I	-	**CT16B0_CAP0 —** Capture input 0 for 16-bit timer 0.
PIO0_3	9[3]	yes	I/O	I;PU	**PIO0_3 —** General purpose digital input/output pin.
PIO0_4/SCL	10[4]	yes	I/O	I;PU	**PIO0_4 —** General purpose digital input/output pin (open-drain).
			I/O	-	**SCL —** I^2C-bus, open-drain clock input/output. High-current sink only if I^2C Fast-mode Plus is selected in the I/O configuration register.
PIO0_5/SDA	11[4]	yes	I/O	I;PU	**PIO0_5 —** General purpose digital input/output pin (open-drain).
			I/O	-	**SDA —** I^2C-bus, open-drain data input/output. High-current sink only if I^2C Fast-mode Plus is selected in the I/O configuration register.
PIO0_6/SCK0	15[3]	yes	I/O	I;PU	**PIO0_6 —** General purpose digital input/output pin.
			I/O	-	**SCK0 —** Serial clock for SPI0.
PIO0_7/$\overline{CTS}$	16[3]	yes	I/O	I;PU	**PIO0_7 —** General purpose digital input/output pin (high-current output driver).
			I	-	**$\overline{CTS}$ —** Clear To Send input for UART.
PIO0_8/MISO0/ CT16B0_MAT0	17[3]	yes	I/O	I;PU	**PIO0_8 —** General purpose digital input/output pin.
			I/O	-	**MISO0 —** Master In Slave Out for SPI0.
			O	-	**CT16B0_MAT0 —** Match output 0 for 16-bit timer 0.
PIO0_9/MOSI0/ CT16B0_MAT1	18[3]	yes	I/O	I;PU	**PIO0_9 —** General purpose digital input/output pin.
			I/O	-	**MOSI0 —** Master Out Slave In for SPI0.
			O	-	**CT16B0_MAT1 —** Match output 1 for 16-bit timer 0.
SWCLK/PIO0_10/ SCK0/ CT16B0_MAT2	19[3]	yes	I	I;PU	**SWCLK —** Serial wire clock.
			I/O	-	**PIO0_10 —** General purpose digital input/output pin.
			I/O	-	**SCK0 —** Serial clock for SPI0.
			O	-	**CT16B0_MAT2 —** Match output 2 for 16-bit timer 0.
R/PIO0_11/AD0/ CT32B0_MAT3	21[5]	yes	-	I;PU	**R —** Reserved. Configure for an alternate function in the IOCONFIG block.
			I/O	-	**PIO0_11 —** General purpose digital input/output pin.
			I	-	**AD0 —** A/D converter, input 0.
			O	-	**CT32B0_MAT3 —** Match output 3 for 32-bit timer 0.
PIO1_0 to PIO1_11					**Port 1 —** Port 1 is a 12-bit I/O port with individual direction and function controls for each bit. The operation of port 1 pins depends on the function selected through the IOCONFIG register block.

All information provided in this document is subject to legal disclaimers.

© NXP B.V. 2012. All rights reserved.

Table 9. LPC1100 and LPC1100L series: LPC1111/12/13/14 pin description table (HVQFN33 package) *...continued*

Symbol	Pin	Start logic input	Type	Reset state [1]	Description
R/PIO1_0/AD1/ CT32B1_CAP0	22[5]	yes	-	I;PU	**R —** Reserved. Configure for an alternate function in the IOCONFIG block.
			I/O	-	**PIO1_0 —** General purpose digital input/output pin.
			I	-	**AD1 —** A/D converter, input 1.
			I	-	**CT32B1_CAP0 —** Capture input 0 for 32-bit timer 1.
R/PIO1_1/AD2/ CT32B1_MAT0	23[5]	no	-	I;PU	**R —** Reserved. Configure for an alternate function in the IOCONFIG block.
			I/O	-	**PIO1_1 —** General purpose digital input/output pin.
			I	-	**AD2 —** A/D converter, input 2.
			O	-	**CT32B1_MAT0 —** Match output 0 for 32-bit timer 1.
R/PIO1_2/AD3/ CT32B1_MAT1	24[5]	no	-	I;PU	**R —** Reserved. Configure for an alternate function in the IOCONFIG block.
			I/O	-	**PIO1_2 —** General purpose digital input/output pin.
			I	-	**AD3 —** A/D converter, input 3.
			O	-	**CT32B1_MAT1 —** Match output 1 for 32-bit timer 1.
SWDIO/PIO1_3/ AD4/CT32B1_MAT2	25[5]	no	I/O	I;PU	**SWDIO —** Serial wire debug input/output.
			I/O	-	**PIO1_3 —** General purpose digital input/output pin.
			I	-	**AD4 —** A/D converter, input 4.
			O	-	**CT32B1_MAT2 —** Match output 2 for 32-bit timer 1.
PIO1_4/AD5/ CT32B1_MAT3/ WAKEUP	26[5]	no	I/O	I;PU	**PIO1_4 —** General purpose digital input/output pin with 10 ns glitch filter.
			I	-	**AD5 —** A/D converter, input 5.
			O	-	**CT32B1_MAT3 —** Match output 3 for 32-bit timer 1.
			I	-	**WAKEUP —** Deep power-down mode wake-up pin with 20 ns glitch filter. This pin must be pulled HIGH externally to enter Deep power-down mode and pulled LOW to exit Deep power-down mode. A LOW-going pulse as short as 50 ns wakes up the part.
PIO1_5/$\overline{\text{RTS}}$/ CT32B0_CAP0	30[3]	no	I/O	I;PU	**PIO1_5 —** General purpose digital input/output pin.
			O	-	**$\overline{\text{RTS}}$ —** Request To Send output for UART.
			I	-	**CT32B0_CAP0 —** Capture input 0 for 32-bit timer 0.
PIO1_6/RXD/ CT32B0_MAT0	31[3]	no	I/O	I;PU	**PIO1_6 —** General purpose digital input/output pin.
			I	-	**RXD —** Receiver input for UART.
			O	-	**CT32B0_MAT0 —** Match output 0 for 32-bit timer 0.
PIO1_7/TXD/ CT32B0_MAT1	32[3]	no	I/O	I;PU	**PIO1_7 —** General purpose digital input/output pin.
			O	-	**TXD —** Transmitter output for UART.
			O	-	**CT32B0_MAT1 —** Match output 1 for 32-bit timer 0.
PIO1_8/ CT16B1_CAP0	7[3]	no	I/O	I;PU	**PIO1_8 —** General purpose digital input/output pin.
			I	-	**CT16B1_CAP0 —** Capture input 0 for 16-bit timer 1.
PIO1_9/ CT16B1_MAT0	12[3]	no	I/O	I;PU	**PIO1_9 —** General purpose digital input/output pin.
			O	-	**CT16B1_MAT0 —** Match output 0 for 16-bit timer 1.

All information provided in this document is subject to legal disclaimers.

© NXP B.V. 2012. All rights reserved.

Table 9. LPC1100 and LPC1100L series: LPC1111/12/13/14 pin description table (HVQFN33 package) *...continued*

Symbol	Pin	Start logic input	Type	Reset state [1]	Description
PIO1_10/AD6/ CT16B1_MAT1	20[5]	no	I/O	I;PU	**PIO1_10 —** General purpose digital input/output pin.
			I	-	**AD6 —** A/D converter, input 6.
			O	-	**CT16B1_MAT1 —** Match output 1 for 16-bit timer 1.
PIO1_11/AD7	27[5]	no	I/O	I;PU	**PIO1_11 —** General purpose digital input/output pin.
			I	-	**AD7 —** A/D converter, input 7.
PIO2_0					**Port 2 —** Port 2 is a 12-bit I/O port with individual direction and function controls for each bit. The operation of port 2 pins depends on the function selected through the IOCONFIG register block. Pins PIO2_1 to PIO2_11 are not available.
PIO2_0/$\overline{\text{DTR}}$	1[3]	no	I/O	I;PU	**PIO2_0 —** General purpose digital input/output pin.
			O	-	**$\overline{\text{DTR}}$ —** Data Terminal Ready output for UART.
PIO3_0 to PIO3_5					**Port 3 —** Port 3 is a 12-bit I/O port with individual direction and function controls for each bit. The operation of port 3 pins depends on the function selected through the IOCONFIG register block. Pins PIO3_0, PIO3_1, PIO3_3 and PIO3_6 to PIO3_11 are not available.
PIO3_2	28[3]	no	I/O	I;PU	**PIO3_2 —** General purpose digital input/output pin.
PIO3_4	13[3]	no	I/O	I;PU	**PIO3_4 —** General purpose digital input/output pin.
PIO3_5	14[3]	no	I/O	I;PU	**PIO3_5 —** General purpose digital input/output pin.
V_{DD}	6; 29	-	I	-	3.3 V supply voltage to the internal regulator, the external rail, and the ADC. Also used as the ADC reference voltage.
XTALIN	4[6]	-	I	-	Input to the oscillator circuit and internal clock generator circuits. Input voltage must not exceed 1.8 V.
XTALOUT	5[6]	-	O	-	Output from the oscillator amplifier.
V_{SS}	33	-	-	-	Thermal pad. Connect to ground.

[1] Pin state at reset for default function: I = Input; O = Output; PU = internal pull-up enabled (pins pulled up to 2.6 V for LPC111x/101/201/301, pins pulled up to full V_{DD} level on LPC111x/002/102/202/302 (V_{DD} = 3.3 V)); IA = inactive, no pull-up/down enabled.

[2] See Figure 48 for the reset pad configuration. $\overline{\text{RESET}}$ functionality is not available in Deep power-down mode. Use the WAKEUP pin to reset the chip and wake up from Deep power-down mode. An external pull-up resistor is required on this pin for the Deep power-down mode.

[3] 5 V tolerant pad providing digital I/O functions with configurable pull-up/pull-down resistors and configurable hysteresis (see Figure 47).

[4] I^2C-bus pads compliant with the I^2C-bus specification for I^2C standard mode and I^2C Fast-mode Plus.

[5] 5 V tolerant pad providing digital I/O functions with configurable pull-up/pull-down resistors, configurable hysteresis, and analog input. When configured as a ADC input, digital section of the pad is disabled, and the pin is not 5 V tolerant (see Figure 47).

[6] When the system oscillator is not used, connect XTALIN and XTALOUT as follows: XTALIN can be left floating or can be grounded (grounding is preferred to reduce susceptibility to noise). XTALOUT should be left floating.

All information provided in this document is subject to legal disclaimers.

© NXP B.V. 2012. All rights reserved.

Table 10. LPC1100XL series: LPC1113/14/15 pin description table (LQFP48 package)

Symbol	Pin	Start logic input	Type	Reset state [1]	Description
PIO0_0 to PIO0_11			I/O		**Port 0 —** Port 0 is a 12-bit I/O port with individual direction and function controls for each bit. The operation of port 0 pins depends on the function selected through the IOCONFIG register block.
$\overline{\text{RESET}}$/PIO0_0	3[2]	yes	I	I; PU	**$\overline{\text{RESET}}$ —** External reset input with 20 ns glitch filter. A LOW-going pulse as short as 50 ns on this pin resets the device, causing I/O ports and peripherals to take on their default states, and processor execution to begin at address 0.
			I/O	-	**PIO0_0 —** General purpose digital input/output pin with 10 ns glitch filter.
PIO0_1/CLKOUT/ CT32B0_MAT2	4[3]	yes	I/O	I; PU	**PIO0_1 —** General purpose digital input/output pin. A LOW level on this pin during reset starts the ISP command handler.
			O	-	**CLKOUT —** Clockout pin.
			O	-	**CT32B0_MAT2 —** Match output 2 for 32-bit timer 0.
PIO0_2/SSEL0/ CT16B0_CAP0	10[3]	yes	I/O	I; PU	**PIO0_2 —** General purpose digital input/output pin.
			I/O	-	**SSEL0 —** Slave Select for SPI0.
			I	-	**CT16B0_CAP0 —** Capture input 0 for 16-bit timer 0.
PIO0_3	14[3]	yes	I/O	I; PU	**PIO0_3 —** General purpose digital input/output pin.
PIO0_4/SCL	15[4]	yes	I/O	I; IA	**PIO0_4 —** General purpose digital input/output pin (open-drain).
			I/O	-	**SCL —** I^2C-bus, open-drain clock input/output. High-current sink only if I^2C Fast-mode Plus is selected in the I/O configuration register.
PIO0_5/SDA	16[4]	yes	I/O	I; IA	**PIO0_5 —** General purpose digital input/output pin (open-drain).
			I/O	-	**SDA —** I^2C-bus, open-drain data input/output. High-current sink only if I^2C Fast-mode Plus is selected in the I/O configuration register.
PIO0_6/SCK0	22[3]	yes	I/O	I; PU	**PIO0_6 —** General purpose digital input/output pin.
			I/O	-	**SCK0 —** Serial clock for SPI0.
PIO0_7/$\overline{\text{CTS}}$	23[3]	yes	I/O	I; PU	**PIO0_7 —** General purpose digital input/output pin (high-current output driver).
			I	-	**$\overline{\text{CTS}}$ —** Clear To Send input for UART.
PIO0_8/MISO0/ CT16B0_MAT0	27[3]	yes	I/O	I; PU	**PIO0_8 —** General purpose digital input/output pin.
			I/O	-	**MISO0 —** Master In Slave Out for SPI0.
			O	-	**CT16B0_MAT0 —** Match output 0 for 16-bit timer 0.
PIO0_9/MOSI0/ CT16B0_MAT1	28[3]	yes	I/O	I; PU	**PIO0_9 —** General purpose digital input/output pin.
			I/O	-	**MOSI0 —** Master Out Slave In for SPI0.
			O	-	**CT16B0_MAT1 —** Match output 1 for 16-bit timer 0.
SWCLK/PIO0_10/ SCK0/ CT16B0_MAT2	29[3]	yes	I	I; PU	**SWCLK —** Serial wire clock.
			I/O	-	**PIO0_10 —** General purpose digital input/output pin.
			I/O	-	**SCK0 —** Serial clock for SPI0.
			O	-	**CT16B0_MAT2 —** Match output 2 for 16-bit timer 0.

All information provided in this document is subject to legal disclaimers.

© NXP B.V. 2012. All rights reserved.

Table 10. LPC1100XL series: LPC1113/14/15 pin description table (LQFP48 package) *...continued*

Symbol	Pin	Start logic input	Type	Reset state [1]	Description
R/PIO0_11/ AD0/CT32B0_MAT3	32[5]	yes	I	I; PU	**R —** Reserved. Configure for an alternate function in the IOCONFIG block.
			I/O	-	**PIO0_11 —** General purpose digital input/output pin.
			I	-	**AD0 —** A/D converter, input 0.
			O	-	**CT32B0_MAT3 —** Match output 3 for 32-bit timer 0.
PIO1_0 to PIO1_11			I/O		**Port 1 —** Port 1 is a 12-bit I/O port with individual direction and function controls for each bit. The operation of port 1 pins depends on the function selected through the IOCONFIG register block.
R/PIO1_0/ AD1/CT32B1_CAP0	33[5]	yes	I	I; PU	**R —** Reserved. Configure for an alternate function in the IOCONFIG block.
			I/O	-	**PIO1_0 —** General purpose digital input/output pin.
			I	-	**AD1 —** A/D converter, input 1.
			I	-	**CT32B1_CAP0 —** Capture input 0 for 32-bit timer 1.
R/PIO1_1/ AD2/CT32B1_MAT0	34[5]	no	O	I; PU	**R —** Reserved. Configure for an alternate function in the IOCONFIG block.
			I/O	-	**PIO1_1 —** General purpose digital input/output pin.
			I	-	**AD2 —** A/D converter, input 2.
			O	-	**CT32B1_MAT0 —** Match output 0 for 32-bit timer 1.
R/PIO1_2/ AD3/CT32B1_MAT1	35[5]	no	I	I; PU	**R —** Reserved. Configure for an alternate function in the IOCONFIG block.
			I/O	-	**PIO1_2 —** General purpose digital input/output pin.
			I	-	**AD3 —** A/D converter, input 3.
			O	-	**CT32B1_MAT1 —** Match output 1 for 32-bit timer 1.
SWDIO/PIO1_3/ AD4/CT32B1_MAT2	39[5]	no	I/O	I; PU	**SWDIO —** Serial wire debug input/output.
			I/O	-	**PIO1_3 —** General purpose digital input/output pin.
			I	-	**AD4 —** A/D converter, input 4.
			O	-	**CT32B1_MAT2 —** Match output 2 for 32-bit timer 1.
PIO1_4/AD5/ CT32B1_MAT3/ WAKEUP	40[5]	no	I/O	I; PU	**PIO1_4 —** General purpose digital input/output pin with 10 ns glitch filter.
			I	-	**AD5 —** A/D converter, input 5.
			O	-	**CT32B1_MAT3 —** Match output 3 for 32-bit timer 1.
			I	-	**WAKEUP —** Deep power-down mode wake-up pin with 20 ns glitch filter. This pin must be pulled HIGH externally to enter Deep power-down mode and pulled LOW to exit Deep power-down mode. A LOW-going pulse as short as 50 ns wakes up the part.
PIO1_5/$\overline{\text{RTS}}$/ CT32B0_CAP0	45[3]	no	I/O	I; PU	**PIO1_5 —** General purpose digital input/output pin.
			O	-	**$\overline{\text{RTS}}$ —** Request To Send output for UART.
			I	-	**CT32B0_CAP0 —** Capture input 0 for 32-bit timer 0.
PIO1_6/RXD/ CT32B0_MAT0	46[3]	no	I/O	I; PU	**PIO1_6 —** General purpose digital input/output pin.
			I	-	**RXD —** Receiver input for UART.
			O	-	**CT32B0_MAT0 —** Match output 0 for 32-bit timer 0.

All information provided in this document is subject to legal disclaimers.

© NXP B.V. 2012. All rights reserved.

Table 10. LPC1100XL series: LPC1113/14/15 pin description table (LQFP48 package) *...continued*

Symbol	Pin	Start logic input	Type	Reset state [1]	Description
PIO1_7/TXD/ CT32B0_MAT1	47[3]	no	I/O	I; PU	**PIO1_7 —** General purpose digital input/output pin.
			O	-	**TXD —** Transmitter output for UART.
			O	-	**CT32B0_MAT1 —** Match output 1 for 32-bit timer 0.
PIO1_8/ CT16B1_CAP0	9[3]	no	I/O	I; PU	**PIO1_8 —** General purpose digital input/output pin.
			I	-	**CT16B1_CAP0 —** Capture input 0 for 16-bit timer 1.
PIO1_9/ CT16B1_MAT0/ MOSI1	17[3]	no	I/O	I; PU	**PIO1_9 —** General purpose digital input/output pin.
			O	-	**CT16B1_MAT0 —** Match output 0 for 16-bit timer 1.
			I/O	-	**MOSI1 —** Master Out Slave In for SPI1.
PIO1_10/AD6/ CT16B1_MAT1/ MISO1	30[5]	no	I/O	I; PU	**PIO1_10 —** General purpose digital input/output pin.
			I	-	**AD6 —** A/D converter, input 6.
			O	-	**CT16B1_MAT1 —** Match output 1 for 16-bit timer 1.
			I/O	-	**MISO1 —** Master In Slave Out for SPI1.
PIO1_11/AD7/ CT32B1_CAP1	42[5]	no	I/O	I; PU	**PIO1_11 —** General purpose digital input/output pin.
			I	-	**AD7 —** A/D converter, input 7.
			I	-	**CT32B1_CAP1 —** Capture input 1 for 32-bit timer 1.
PIO2_0 to PIO2_11			I/O		**Port 2 —** Port 2 is a 12-bit I/O port with individual direction and function controls for each bit. The operation of port 2 pins depends on the function selected through the IOCONFIG register block.
PIO2_0/$\overline{\text{DTR}}$/SSEL1	2[3]	no	I/O	I; PU	**PIO2_0 —** General purpose digital input/output pin.
			O	-	**$\overline{\text{DTR}}$ —** Data Terminal Ready output for UART.
			I/O	-	**SSEL1 —** Slave Select for SPI1.
PIO2_1/$\overline{\text{DSR}}$/SCK1	13[3]	no	I/O	I; PU	**PIO2_1 —** General purpose digital input/output pin.
			I	-	**$\overline{\text{DSR}}$ —** Data Set Ready input for UART.
			I/O	-	**SCK1 —** Serial clock for SPI1.
PIO2_2/$\overline{\text{DCD}}$/MISO1	26[3]	no	I/O	I; PU	**PIO2_2 —** General purpose digital input/output pin.
			I	-	**$\overline{\text{DCD}}$ —** Data Carrier Detect input for UART.
			I/O	-	**MISO1 —** Master In Slave Out for SPI1.
PIO2_3/$\overline{\text{RI}}$/MOSI1	38[3]	no	I/O	I; PU	**PIO2_3 —** General purpose digital input/output pin.
			I	-	**$\overline{\text{RI}}$ —** Ring Indicator input for UART.
			I/O	-	**MOSI1 —** Master Out Slave In for SPI1.
PIO2_4/ CT16B1_MAT1/ SSEL1	19[3]	no	I/O	I; PU	**PIO2_4 —** General purpose digital input/output pin.
			O	-	**CT16B1_MAT1 —** Match output 1 for 16-bit timer 1.
			O	-	**SSEL1 —** Slave Select for SPI1.
PIO2_5/ CT32B0_MAT0	20[3]	no	I/O	I; PU	**PIO2_5 —** General purpose digital input/output pin.
			O	-	**CT32B0_MAT0 —** Match output 0 for 32-bit timer 0.
PIO2_6/ CT32B0_MAT1	1[3]	no	I/O	I; PU	**PIO2_6 —** General purpose digital input/output pin.
			O	-	**CT32B0_MAT1 —** Match output 1 for 32-bit timer 0.

All information provided in this document is subject to legal disclaimers.

© NXP B.V. 2012. All rights reserved.

Table 10. LPC1100XL series: LPC1113/14/15 pin description table (LQFP48 package) *...continued*

Symbol	Pin	Start logic input	Type	Reset state [1]	Description
PIO2_7/ CT32B0_MAT2/RXD	11[3]	no	I/O	I; PU	**PIO2_7 —** General purpose digital input/output pin.
			O	-	**CT32B0_MAT2 —** Match output 2 for 32-bit timer 0.
			I	-	**RXD —** Receiver input for UART.
PIO2_8/ CT32B0_MAT3/TXD	12[3]	no	I/O	I; PU	**PIO2_8 —** General purpose digital input/output pin.
			O	-	**CT32B0_MAT3 —** Match output 3 for 32-bit timer 0.
			O	-	**TXD —** Transmitter output for UART.
PIO2_9/ CT32B0_CAP0	24[3]	no	I/O	I; PU	**PIO2_9 —** General purpose digital input/output pin.
			I	-	**CT32B0_CAP0 —** Capture input 0 for 32-bit timer 0.
PIO2_10	25[3]	no	I/O	I; PU	**PIO2_10 —** General purpose digital input/output pin.
PIO2_11/SCK0/ CT32B0_CAP1	31[3]	no	I/O	I; PU	**PIO2_11 —** General purpose digital input/output pin.
			I/O	-	**SCK0 —** Serial clock for SPI0.
			I	-	**CT32B0_CAP1 —** Capture input for 32-bit timer 0.
PIO3_0 to PIO3_5			I/O		**Port 3 —** Port 3 is a 12-bit I/O port with individual direction and function controls for each bit. The operation of port 3 pins depends on the function selected through the IOCONFIG register block. Pins PIO3_6 to PIO3_11 are not available.
PIO3_0/$\overline{\text{DTR}}$/ CT16B0_MAT0/TXD	36[3]	no	I/O	I; PU	**PIO3_0 —** General purpose digital input/output pin.
			O	-	**$\overline{\text{DTR}}$ —** Data Terminal Ready output for UART.
			O	-	**CT16B0_MAT0 —** Match output 0 for 16-bit timer 0.
			O	-	**TXD —** Transmitter Output for UART.
PIO3_1/$\overline{\text{DSR}}$/ CT16B0_MAT1/RXD	37[3]	no	I/O	I; PU	**PIO3_1 —** General purpose digital input/output pin.
			I	-	**$\overline{\text{DSR}}$ —** Data Set Ready input for UART.
			O	-	**CT16B0_MAT1 —** Match output 1 for 16-bit timer 0.
			I	-	**RXD —** Receiver input for UART.
PIO3_2/$\overline{\text{DCD}}$/ CT16B0_MAT2/ SCK1	43[3]	no	I/O	I; PU	**PIO3_2 —** General purpose digital input/output pin.
			I	-	**$\overline{\text{DCD}}$ —** Data Carrier Detect input for UART.
			O	-	**CT16B0_MAT2 —** Match output 2 for 16-bit timer 0.
			I/O	-	**SCK1 —** Serial clock for SPI1.
PIO3_3/$\overline{\text{RI}}$/ CT16B0_CAP0	48[3]	no	I/O	I; PU	**PIO3_3 —** General purpose digital input/output pin.
			I	-	**$\overline{\text{RI}}$ —** Ring Indicator input for UART.
			I	-	**CT16B0_CAP0 —** Capture input 0 for 16-bit timer 0.
PIO3_4/ CT16B0_CAP1/RXD	18[3]	no	I/O	I; PU	**PIO3_4 —** General purpose digital input/output pin.
			I	-	**CT16B0_CAP1 —** Capture input 1 for 16-bit timer 0.
			I	-	**RXD —** Receiver input for UART
PIO3_5/ CT16B1_CAP1/TXD	21[3]	no	I/O	I; PU	**PIO3_5 —** General purpose digital input/output pin.
			I	-	**CT16B1_CAP1 —** Capture input 1 for 16-bit timer 1.
			O	-	**TXD —** Transmitter output for UART
V_{DD}	8; 44	-	I	-	3.3 V supply voltage to the internal regulator, the external rail, and the ADC. Also used as the ADC reference voltage.

All information provided in this document is subject to legal disclaimers.

© NXP B.V. 2012. All rights reserved.

Table 10. LPC1100XL series: LPC1113/14/15 pin description table (LQFP48 package) *...continued*

Symbol	Pin	Start logic input	Type	Reset state [1]	Description
XTALIN	6[6]	-	I	-	Input to the oscillator circuit and internal clock generator circuits. Input voltage must not exceed 1.8 V.
XTALOUT	7[6]	-	O	-	Output from the oscillator amplifier.
V_{SS}	5; 41	-	I	-	Ground.

[1] Pin state at reset for default function: I = Input; O = Output; PU = internal pull-up enabled (pins pulled up to full V_{DD} level (V_{DD} = 3.3 V)); IA = inactive, no pull-up/down enabled.

[2] See Figure 48 for the reset pad configuration. $\overline{\text{RESET}}$ functionality is not available in Deep power-down mode. Use the WAKEUP pin to reset the chip and wake up from Deep power-down mode. An external pull-up resistor is required on this pin for the Deep power-down mode.

[3] 5 V tolerant pad providing digital I/O functions with configurable pull-up/pull-down resistors and configurable hysteresis (see Figure 47).

[4] I^2C-bus pads compliant with the I^2C-bus specification for I^2C standard mode and I^2C Fast-mode Plus.

[5] 5 V tolerant pad providing digital I/O functions with configurable pull-up/pull-down resistors, configurable hysteresis, and analog input. When configured as a ADC input, digital section of the pad is disabled and the pin is not 5 V tolerant (see Figure 47).

[6] When the system oscillator is not used, connect XTALIN and XTALOUT as follows: XTALIN can be left floating or can be grounded (grounding is preferred to reduce susceptibility to noise). XTALOUT should be left floating.

All information provided in this document is subject to legal disclaimers.

© NXP B.V. 2012. All rights reserved.

Table 11. LPC1100XL series: LPC1111/12/13/14 pin description table (HVQFN33 package)

Symbol	Pin	Start logic input	Type	Reset state [1]	Description
PIO0_0 to PIO0_11					**Port 0 —** Port 0 is a 12-bit I/O port with individual direction and function controls for each bit. The operation of port 0 pins depends on the function selected through the IOCONFIG register block.
$\overline{\text{RESET}}$/PIO0_0	2[2]	yes	I	I;PU	**$\overline{\text{RESET}}$ —** External reset input with 20 ns glitch filter. A LOW-going pulse as short as 50 ns on this pin resets the device, causing I/O ports and peripherals to take on their default states and processor execution to begin at address 0.
			I/O	-	**PIO0_0 —** General purpose digital input/output pin with 10 ns glitch filter.
PIO0_1/CLKOUT/ CT32B0_MAT2	3[3]	yes	I/O	I;PU	**PIO0_1 —** General purpose digital input/output pin. A LOW level on this pin during reset starts the ISP command handler.
			O	-	**CLKOUT —** Clock out pin.
			O	-	**CT32B0_MAT2 —** Match output 2 for 32-bit timer 0.
PIO0_2/SSEL0/ CT16B0_CAP0	8[3]	yes	I/O	I;PU	**PIO0_2 —** General purpose digital input/output pin.
			I/O	-	**SSEL0 —** Slave select for SPI0.
			I	-	**CT16B0_CAP0 —** Capture input 0 for 16-bit timer 0.
PIO0_3	9[3]	yes	I/O	I;PU	**PIO0_3 —** General purpose digital input/output pin.
PIO0_4/SCL	10[4]	yes	I/O	I;PU	**PIO0_4 —** General purpose digital input/output pin (open-drain).
			I/O	-	**SCL —** I^2C-bus, open-drain clock input/output. High-current sink only if I^2C Fast-mode Plus is selected in the I/O configuration register.
PIO0_5/SDA	11[4]	yes	I/O	I;PU	**PIO0_5 —** General purpose digital input/output pin (open-drain).
			I/O	-	**SDA —** I^2C-bus, open-drain data input/output. High-current sink only if I^2C Fast-mode Plus is selected in the I/O configuration register.
PIO0_6/SCK0	15[3]	yes	I/O	I;PU	**PIO0_6 —** General purpose digital input/output pin.
			I/O	-	**SCK0 —** Serial clock for SPI0.
PIO0_7/$\overline{\text{CTS}}$	16[3]	yes	I/O	I;PU	**PIO0_7 —** General purpose digital input/output pin (high-current output driver).
			I	-	**$\overline{\text{CTS}}$ —** Clear To Send input for UART.
PIO0_8/MISO0/ CT16B0_MAT0	17[3]	yes	I/O	I;PU	**PIO0_8 —** General purpose digital input/output pin.
			I/O	-	**MISO0 —** Master In Slave Out for SPI0.
			O	-	**CT16B0_MAT0 —** Match output 0 for 16-bit timer 0.
PIO0_9/MOSI0/ CT16B0_MAT1	18[3]	yes	I/O	I;PU	**PIO0_9 —** General purpose digital input/output pin.
			I/O	-	**MOSI0 —** Master Out Slave In for SPI0.
			O	-	**CT16B0_MAT1 —** Match output 1 for 16-bit timer 0.
SWCLK/PIO0_10/ SCK0/ CT16B0_MAT2	19[3]	yes	I	I;PU	**SWCLK —** Serial wire clock.
			I/O	-	**PIO0_10 —** General purpose digital input/output pin.
			I/O	-	**SCK0 —** Serial clock for SPI0.
			O	-	**CT16B0_MAT2 —** Match output 2 for 16-bit timer 0.

All information provided in this document is subject to legal disclaimers.

© NXP B.V. 2012. All rights reserved.

Table 11. LPC1100XL series: LPC1111/12/13/14 pin description table (HVQFN33 package) *...continued*

Symbol	Pin	Start logic input	Type	Reset state [1]	Description
R/PIO0_11/AD0/ CT32B0_MAT3	21[5]	yes	-	I;PU	**R —** Reserved. Configure for an alternate function in the IOCONFIG block.
			I/O	-	**PIO0_11 —** General purpose digital input/output pin.
			I	-	**AD0 —** A/D converter, input 0.
			O	-	**CT32B0_MAT3 —** Match output 3 for 32-bit timer 0.
PIO1_0 to PIO1_11					**Port 1 —** Port 1 is a 12-bit I/O port with individual direction and function controls for each bit. The operation of port 1 pins depends on the function selected through the IOCONFIG register block.
R/PIO1_0/AD1/ CT32B1_CAP0	22[5]	yes	-	I;PU	**R —** Reserved. Configure for an alternate function in the IOCONFIG block.
			I/O	-	**PIO1_0 —** General purpose digital input/output pin.
			I	-	**AD1 —** A/D converter, input 1.
			I	-	**CT32B1_CAP0 —** Capture input 0 for 32-bit timer 1.
R/PIO1_1/AD2/ CT32B1_MAT0	23[5]	no	-	I;PU	**R —** Reserved. Configure for an alternate function in the IOCONFIG block.
			I/O	-	**PIO1_1 —** General purpose digital input/output pin.
			I	-	**AD2 —** A/D converter, input 2.
			O	-	**CT32B1_MAT0 —** Match output 0 for 32-bit timer 1.
R/PIO1_2/AD3/ CT32B1_MAT1	24[5]	no	-	I;PU	**R —** Reserved. Configure for an alternate function in the IOCONFIG block.
			I/O	-	**PIO1_2 —** General purpose digital input/output pin.
			I	-	**AD3 —** A/D converter, input 3.
			O	-	**CT32B1_MAT1 —** Match output 1 for 32-bit timer 1.
SWDIO/PIO1_3/ AD4/CT32B1_MAT2	25[5]	no	I/O	I;PU	**SWDIO —** Serial wire debug input/output.
			I/O	-	**PIO1_3 —** General purpose digital input/output pin.
			I	-	**AD4 —** A/D converter, input 4.
			O	-	**CT32B1_MAT2 —** Match output 2 for 32-bit timer 1.
PIO1_4/AD5/ CT32B1_MAT3/ WAKEUP	26[5]	no	I/O	I;PU	**PIO1_4 —** General purpose digital input/output pin with 10 ns glitch filter.
			I	-	**AD5 —** A/D converter, input 5.
			O	-	**CT32B1_MAT3 —** Match output 3 for 32-bit timer 1.
			I	-	**WAKEUP —** Deep power-down mode wake-up pin with 20 ns glitch filter. This pin must be pulled HIGH externally to enter Deep power-down mode and pulled LOW to exit Deep power-down mode. A LOW-going pulse as short as 50 ns wakes up the part.
PIO1_5/$\overline{\text{RTS}}$/ CT32B0_CAP0	30[3]	no	I/O	I;PU	**PIO1_5 —** General purpose digital input/output pin.
			O	-	**$\overline{\text{RTS}}$ —** Request To Send output for UART.
			I	-	**CT32B0_CAP0 —** Capture input 0 for 32-bit timer 0.
PIO1_6/RXD/ CT32B0_MAT0	31[3]	no	I/O	I;PU	**PIO1_6 —** General purpose digital input/output pin.
			I	-	**RXD —** Receiver input for UART.
			O	-	**CT32B0_MAT0 —** Match output 0 for 32-bit timer 0.

All information provided in this document is subject to legal disclaimers.

© NXP B.V. 2012. All rights reserved.

Table 11. LPC1100XL series: LPC1111/12/13/14 pin description table (HVQFN33 package) *...continued*

Symbol	Pin	Start logic input	Type	Reset state [1]	Description
PIO1_7/TXD/ CT32B0_MAT1	32[3]	no	I/O	I;PU	**PIO1_7 —** General purpose digital input/output pin.
			O	-	**TXD —** Transmitter output for UART.
			O	-	**CT32B0_MAT1 —** Match output 1 for 32-bit timer 0.
PIO1_8/ CT16B1_CAP0	7[3]	no	I/O	I;PU	**PIO1_8 —** General purpose digital input/output pin.
			I	-	**CT16B1_CAP0 —** Capture input 0 for 16-bit timer 1.
PIO1_9/ CT16B1_MAT0/ MOSI1	12[3]	no	I/O	I;PU	**PIO1_9 —** General purpose digital input/output pin.
			O	-	**CT16B1_MAT0 —** Match output 0 for 16-bit timer 1.
			I/O	-	**MOSI1 —** Master Out Slave In for SPI1
PIO1_10/AD6/ CT16B1_MAT1/ MISO1	20[5]	no	I/O	I;PU	**PIO1_10 —** General purpose digital input/output pin.
			I	-	**AD6 —** A/D converter, input 6.
			O	-	**CT16B1_MAT1 —** Match output 1 for 16-bit timer 1.
			I/O	-	**MISO1 —** Master In Slave Out for SPI1
PIO1_11/AD7/ CT32B1_CAP1	27[5]	no	I/O	I;PU	**PIO1_11 —** General purpose digital input/output pin.
			I	-	**AD7 —** A/D converter, input 7.
			I	-	**CT32B1_CAP1 —** Capture input 1 for 32-bit timer 1.
PIO2_0					**Port 2 —** Port 2 is a 12-bit I/O port with individual direction and function controls for each bit. The operation of port 2 pins depends on the function selected through the IOCONFIG register block. Pins PIO2_1 to PIO2_11 are not available.
PIO2_0/$\overline{\text{DTR}}$/SSEL1	1[3]	no	I/O	I;PU	**PIO2_0 —** General purpose digital input/output pin.
			O	-	**$\overline{\text{DTR}}$ —** Data Terminal Ready output for UART.
			I/O	-	**SSEL1 —** Slave Select for SPI1.
PIO3_0 to PIO3_5					**Port 3 —** Port 3 is a 12-bit I/O port with individual direction and function controls for each bit. The operation of port 3 pins depends on the function selected through the IOCONFIG register block. Pins PIO3_0, PIO3_1, PIO3_3 and PIO3_6 to PIO3_11 are not available.
PIO3_2/ CT16B0_MAT2/ SCK1	28[3]	no	I/O	I;PU	**PIO3_2 —** General purpose digital input/output pin.
			O	-	**CT16B0_MAT2 —** Match output 2 for 16-bit timer 0.
			I/O	-	**SCK1 —** Serial clock for SPI1.
PIO3_4/ CT16B0_CAP1/RXD	13[3]	no	I/O	I;PU	**PIO3_4 —** General purpose digital input/output pin.
			I	-	**CT16B0_CAP1 —** Capture input 1 for 16-bit timer 0.
			I	-	**RXD —** Receiver input for UART.
PIO3_5/ CT16B1_CAP1/TXD	14[3]	no	I/O	I;PU	**PIO3_5 —** General purpose digital input/output pin.
			I	-	**CT16B1_CAP1 —** Capture input 1 for 16-bit timer 1.
			O	-	**TXD —** Transmitter output for UART.

All information provided in this document is subject to legal disclaimers.

© NXP B.V. 2012. All rights reserved.

Table 11. LPC1100XL series: LPC1111/12/13/14 pin description table (HVQFN33 package) *…continued*

Symbol	Pin	Start logic input	Type	Reset state [1]	Description
V_{DD}	6; 29	-	I	-	3.3 V supply voltage to the internal regulator, the external rail, and the ADC. Also used as the ADC reference voltage.
XTALIN	4[6]	-	I	-	Input to the oscillator circuit and internal clock generator circuits. Input voltage must not exceed 1.8 V.
XTALOUT	5[6]	-	O	-	Output from the oscillator amplifier.
V_{SS}	33	-	-	-	Thermal pad. Connect to ground.

[1] Pin state at reset for default function: I = Input; O = Output; PU = internal pull-up enabled (pins pulled up to full V_{DD} level (V_{DD} = 3.3 V)); IA = inactive, no pull-up/down enabled.

[2] See Figure 48 for the reset pad configuration. $\overline{\text{RESET}}$ functionality is not available in Deep power-down mode. Use the WAKEUP pin to reset the chip and wake up from Deep power-down mode. An external pull-up resistor is required on this pin for the Deep power-down mode.

[3] 5 V tolerant pad providing digital I/O functions with configurable pull-up/pull-down resistors and configurable hysteresis (see Figure 47).

[4] I^2C-bus pads compliant with the I^2C-bus specification for I^2C standard mode and I^2C Fast-mode Plus.

[5] 5 V tolerant pad providing digital I/O functions with configurable pull-up/pull-down resistors, configurable hysteresis, and analog input. When configured as a ADC input, digital section of the pad is disabled, and the pin is not 5 V tolerant (see Figure 47).

[6] When the system oscillator is not used, connect XTALIN and XTALOUT as follows: XTALIN can be left floating or can be grounded (grounding is preferred to reduce susceptibility to noise). XTALOUT should be left floating.

All information provided in this document is subject to legal disclaimers.

© NXP B.V. 2012. All rights reserved.

7. Functional description

7.1 ARM Cortex-M0 processor

The ARM Cortex-M0 is a general purpose, 32-bit microprocessor, which offers high performance and very low power consumption.

7.2 On-chip flash program memory

The LPC1110/11/12/13/14/15 contain 64 kB (LPC1115), 56 kB (LPC1114/333), 48 kB (LPC1114/323), 32 kB (LPC1114), 24 kB (LPC1113), 16 kB (LPC1112), 8 kB (LPC1111) or 4 kB (LPC1110) of on-chip flash memory.

7.3 On-chip SRAM

The LPC1110/11/12/13/14/15 contain a total of 8 kB, 4 kB, 2 kB, or 1 kB on-chip static RAM memory.

7.4 Memory map

The LPC1110/11/12/13/14/15 incorporate several distinct memory regions, shown in the following figures. Figure 13 shows the overall map of the entire address space from the user program viewpoint following reset. The interrupt vector area supports address remapping.

The AHB peripheral area is 2 MB in size, and is divided to allow for up to 128 peripherals. The APB peripheral area is 512 kB in size and is divided to allow for up to 32 peripherals. Each peripheral of either type is allocated 16 kB of space. This allows simplifying the address decoding for each peripheral.

All information provided in this document is subject to legal disclaimers.

© NXP B.V. 2012. All rights reserved.

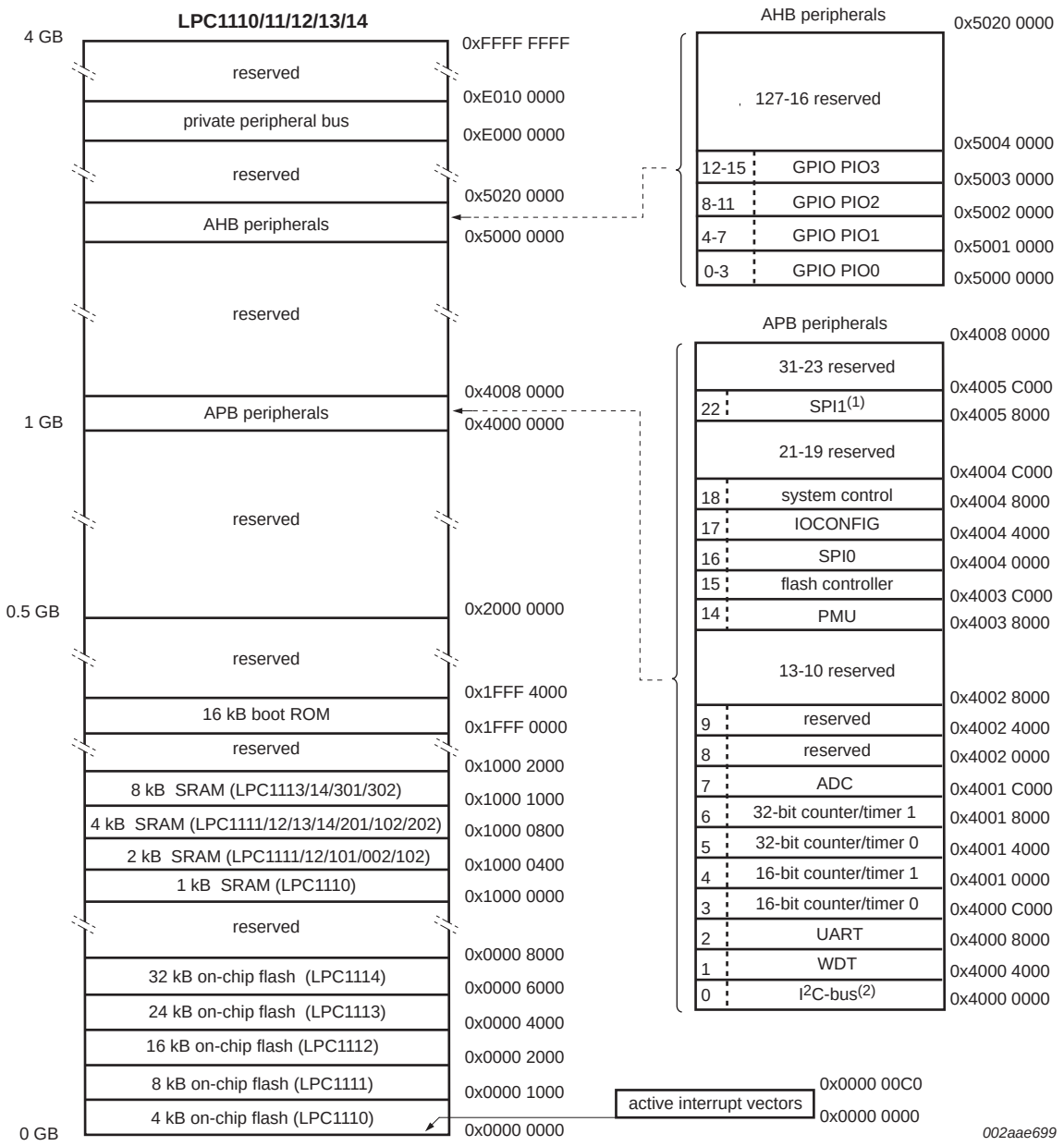

(1) LQFP48 package only.

(1) Not on part LPC1112FDH20/102.

Fig 13. LPC1100 and LPC1100L series memory map

All information provided in this document is subject to legal disclaimers.

© NXP B.V. 2012. All rights reserved.

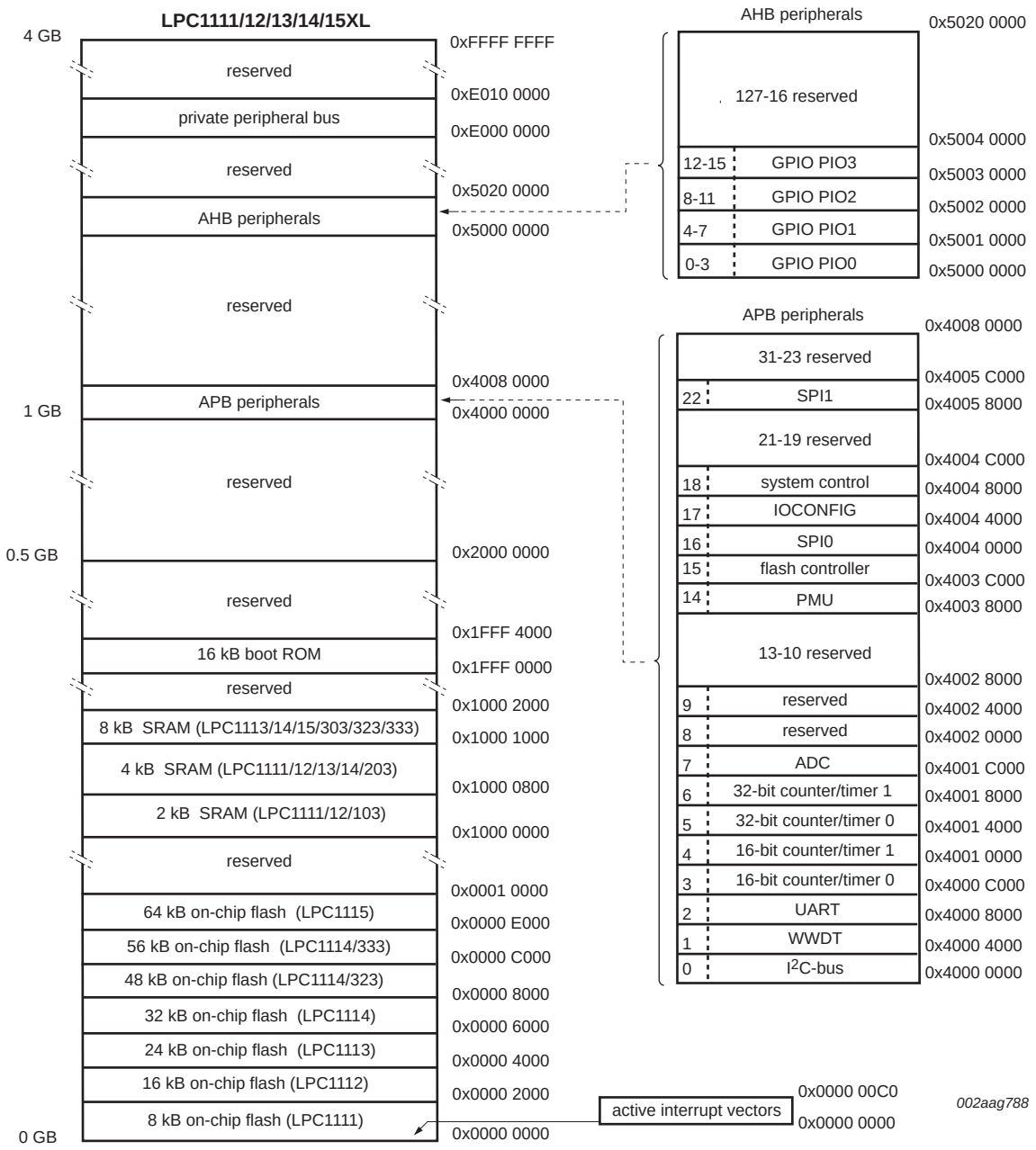

Fig 14. LPC1100XL series memory map

7.5 Nested Vectored Interrupt Controller (NVIC)

The Nested Vectored Interrupt Controller (NVIC) is an integral part of the Cortex-M0. The tight coupling to the CPU allows for low interrupt latency and efficient processing of late arriving interrupts.

7.5.1 Features

- Controls system exceptions and peripheral interrupts.

All information provided in this document is subject to legal disclaimers.

© NXP B.V. 2012. All rights reserved.

- In the LPC1110/11/12/13/14/15, the NVIC supports 32 vectored interrupts including up to 13 inputs to the start logic from individual GPIO pins.
- Four programmable interrupt priority levels with hardware priority level masking.
- Software interrupt generation.

7.5.2 Interrupt sources

Each peripheral device has one interrupt line connected to the NVIC but may have several interrupt flags. Individual interrupt flags may also represent more than one interrupt source.

Any GPIO pin (total of up to 42 pins) regardless of the selected function, can be programmed to generate an interrupt on a level, or rising edge or falling edge, or both.

7.6 IOCONFIG block

The IOCONFIG block allows selected pins of the microcontroller to have more than one function. Configuration registers control the multiplexers to allow connection between the pin and the on-chip peripherals.

Peripherals should be connected to the appropriate pins prior to being activated and prior to any related interrupt(s) being enabled. Activity of any enabled peripheral function that is not mapped to a related pin should be considered undefined.

7.7 Fast general purpose parallel I/O

Device pins that are not connected to a specific peripheral function are controlled by the GPIO registers. Pins may be dynamically configured as inputs or outputs. Multiple outputs can be set or cleared in one write operation.

LPC1110/11/12/13/14/15 use accelerated GPIO functions:

- GPIO registers are a dedicated AHB peripheral so that the fastest possible I/O timing can be achieved.
- Entire port value can be written in one instruction.

Additionally, any GPIO pin (total of up to 42 pins) providing a digital function can be programmed to generate an interrupt on a level, a rising or falling edge, or both.

7.7.1 Features

- Bit level port registers allow a single instruction to set or clear any number of bits in one write operation.
- Direction control of individual bits.
- All I/O default to inputs with pull-ups enabled after reset with the exception of the I^2C-bus pins PIO0_4 and PIO0_5.
- Pull-up/pull-down resistor configuration can be programmed through the IOCONFIG block for each GPIO pin (except for pins PIO0_4 and PIO0_5).
- On the LPC1100, all GPIO pins (except PIO0_4 and PIO0_5) are pulled up to 2.6 V (V_{DD} = 3.3 V) if their pull-up resistor is enabled in the IOCONFIG block.

All information provided in this document is subject to legal disclaimers.

© NXP B.V. 2012. All rights reserved.

- On the LPC1100L and LPC1100XL series, all GPIO pins (except PIO0_4 and PIO0_5) are pulled up to 3.3 V (V_{DD} = 3.3 V) if their pull-up resistor is enabled in the IOCONFIG block.
- Programmable open-drain mode for series LPC1100L and LPC1100XL.

7.8 UART

The LPC1110/11/12/13/14/15 contain one UART.

Support for RS-485/9-bit mode allows both software address detection and automatic address detection using 9-bit mode.

The UART includes a fractional baud rate generator. Standard baud rates such as 115200 Bd can be achieved with any crystal frequency above 2 MHz.

7.8.1 Features

- Maximum UART data bit rate of 3.125 MBit/s.
- 16 Byte Receive and Transmit FIFOs.
- Register locations conform to 16C550 industry standard.
- Receiver FIFO trigger points at 1 B, 4 B, 8 B, and 14 B.
- Built-in fractional baud rate generator covering wide range of baud rates without a need for external crystals of particular values.
- FIFO control mechanism that enables software flow control implementation.
- Support for RS-485/9-bit mode.
- Support for modem control.

7.9 SPI serial I/O controller

The LPC1100 and LPC1100L series contain two SPI controllers on the LQFP48 package and one SPI controller on the HVQFN33/TSSOP28/DIP28/TSSOP20/SO20 packages (SPI0).

The LPC1100XL series contain two SPI controllers.

Both SPI controllers support SSP features.

The SPI controller is capable of operation on a SSP, 4-wire SSI, or Microwire bus. It can interact with multiple masters and slaves on the bus. Only a single master and a single slave can communicate on the bus during a given data transfer. The SPI supports full duplex transfers, with frames of 4 bits to 16 bits of data flowing from the master to the slave and from the slave to the master. In practice, often only one of these data flows carries meaningful data.

7.9.1 Features

- Maximum SPI speed of 25 Mbit/s (master) or 4.17 Mbit/s (slave) (in SSP mode)
- Compatible with Motorola SPI, 4-wire Texas Instruments SSI, and National Semiconductor Microwire buses
- Synchronous serial communication

All information provided in this document is subject to legal disclaimers.

© NXP B.V. 2012. All rights reserved.

- Master or slave operation
- 8-frame FIFOs for both transmit and receive
- 4-bit to 16-bit frame

7.10 I^2C-bus serial I/O controller

The LPC1110/11/12/13/14/15 contain one I^2C-bus controller.

Remark: Part LPC1112FDH20/102 does not contain the I^2C-bus controller.

The I^2C-bus is bidirectional for inter-IC control using only two wires: a Serial Clock Line (SCL) and a Serial DAta line (SDA). Each device is recognized by a unique address and can operate as either a receiver-only device (e.g., an LCD driver) or a transmitter with the capability to both receive and send information (such as memory). Transmitters and/or receivers can operate in either master or slave mode, depending on whether the chip has to initiate a data transfer or is only addressed. The I^2C is a multi-master bus and can be controlled by more than one bus master connected to it.

7.10.1 Features

- The I^2C-interface is a standard I^2C-bus compliant interface with open-drain pins. The I^2C-bus interface also supports Fast-mode Plus with bit rates up to 1 Mbit/s.
- Easy to configure as master, slave, or master/slave.
- Programmable clocks allow versatile rate control.
- Bidirectional data transfer between masters and slaves.
- Multi-master bus (no central master).
- Arbitration between simultaneously transmitting masters without corruption of serial data on the bus.
- Serial clock synchronization allows devices with different bit rates to communicate via one serial bus.
- Serial clock synchronization can be used as a handshake mechanism to suspend and resume serial transfer.
- The I^2C-bus can be used for test and diagnostic purposes.
- The I^2C-bus controller supports multiple address recognition and a bus monitor mode.

7.11 10-bit ADC

The LPC1110/11/12/13/14/15 contain one ADC. It is a single 10-bit successive approximation ADC with eight channels.

7.11.1 Features

- 10-bit successive approximation ADC.
- Input multiplexing among 8 pins.
- Power-down mode.
- Measurement range 0 V to V_{DD}.
- 10-bit conversion time $\geq$ 2.44 μs (up to 400 kSamples/s).
- Burst conversion mode for single or multiple inputs.

All information provided in this document is subject to legal disclaimers.

© NXP B.V. 2012. All rights reserved.

- Optional conversion on transition of input pin or timer match signal.
- Individual result registers for each ADC channel to reduce interrupt overhead.

7.12 General purpose external event counter/timers

The LPC1110/11/12/13/14/15 include two 32-bit counter/timers and two 16-bit counter/timers. The counter/timer is designed to count cycles of the system derived clock. It can optionally generate interrupts or perform other actions at specified timer values, based on four match registers. Each counter/timer also includes up to two capture inputs to trap the timer value when an input signal transitions, optionally generating an interrupt.

7.12.1 Features

- A 32-bit/16-bit timer/counter with a programmable 32-bit/16-bit prescaler.
- Counter or timer operation.
- Up to two capture channels per timer, that can take a snapshot of the timer value when an input signal transitions. A capture event may also generate an interrupt.
- The timer and prescaler may be configured to be cleared on a designated capture event. This feature permits easy pulse width measurement by clearing the timer on the leading edge of an input pulse and capturing the timer value on the trailing edge.
- Four match registers per timer that allow:
  - Continuous operation with optional interrupt generation on match.
  - Stop timer on match with optional interrupt generation.
  - Reset timer on match with optional interrupt generation.
- Up to four external outputs corresponding to match registers, with the following capabilities:
  - Set LOW on match.
  - Set HIGH on match.
  - Toggle on match.
  - Do nothing on match.

7.13 System tick timer

The ARM Cortex-M0 includes a system tick timer (SYSTICK) that is intended to generate a dedicated SYSTICK exception at a fixed time interval (typically 10 ms).

7.14 Watchdog timer (LPC1100 series, LPC111x/101/201/301)

Remark: The watchdog timer without windowed features is available on parts LPC111x/101/201/301.

The purpose of the watchdog is to reset the microcontroller within a selectable time period.

7.14.1 Features

- Internally resets chip if not periodically reloaded.
- Debug mode.

All information provided in this document is subject to legal disclaimers.

© NXP B.V. 2012. All rights reserved.

- Enabled by software but requires a hardware reset or a watchdog reset/interrupt to be disabled.
- Incorrect/Incomplete feed sequence causes reset/interrupt if enabled.
- Flag to indicate watchdog reset.
- Programmable 24-bit timer with internal prescaler.
- Selectable time period from ($T_{cy(WDCLK)} \times 256 \times 4$) to ($T_{cy(WDCLK)} \times 2^{24} \times 4$) in multiples of $T_{cy(WDCLK)} \times 4$.
- The Watchdog Clock (WDCLK) source can be selected from the Internal RC oscillator (IRC), the Watchdog oscillator, or the main clock. This gives a wide range of potential timing choices of Watchdog operation under different power reduction conditions. It also provides the ability to run the WDT from an entirely internal source that is not dependent on an external crystal and its associated components and wiring for increased reliability.

7.15 Windowed WatchDog Timer (LPC1100L and LPC1100XL series)

Remark: The windowed watchdog timer is available on the LPC1100L and LPC1100XL series only.

The purpose of the watchdog is to reset the controller if software fails to periodically service it within a programmable time window.

7.15.1 Features

- Internally resets chip if not periodically reloaded during the programmable time-out period.
- Optional windowed operation requires reload to occur between a minimum and maximum time period, both programmable.
- Optional warning interrupt can be generated at a programmable time prior to watchdog time-out.
- Enabled by software but requires a hardware reset or a watchdog reset/interrupt to be disabled.
- Incorrect feed sequence causes reset or interrupt if enabled.
- Flag to indicate watchdog reset.
- Programmable 24-bit timer with internal prescaler.
- Selectable time period from ($T_{cy(WDCLK)} \times 256 \times 4$) to ($T_{cy(WDCLK)} \times 2^{24} \times 4$) in multiples of $T_{cy(WDCLK)} \times 4$.
- The Watchdog Clock (WDCLK) source can be selected from the IRC or the dedicated watchdog oscillator (WDO). This gives a wide range of potential timing choices of watchdog operation under different power conditions.

7.16 Clocking and power control

7.16.1 Crystal oscillators

The LPC1110/11/12/13/14/15 include three independent oscillators. These are the system oscillator, the Internal RC oscillator (IRC), and the Watchdog oscillator. Each oscillator can be used for more than one purpose as required in a particular application.

All information provided in this document is subject to legal disclaimers.

© NXP B.V. 2012. All rights reserved.

Following reset, the LPC1110/11/12/13/14/15 will operate from the Internal RC oscillator until switched by software. This allows systems to operate without any external crystal and the bootloader code to operate at a known frequency.

See Figure 15 for an overview of the LPC1110/11/12/13/14/15 clock generation.

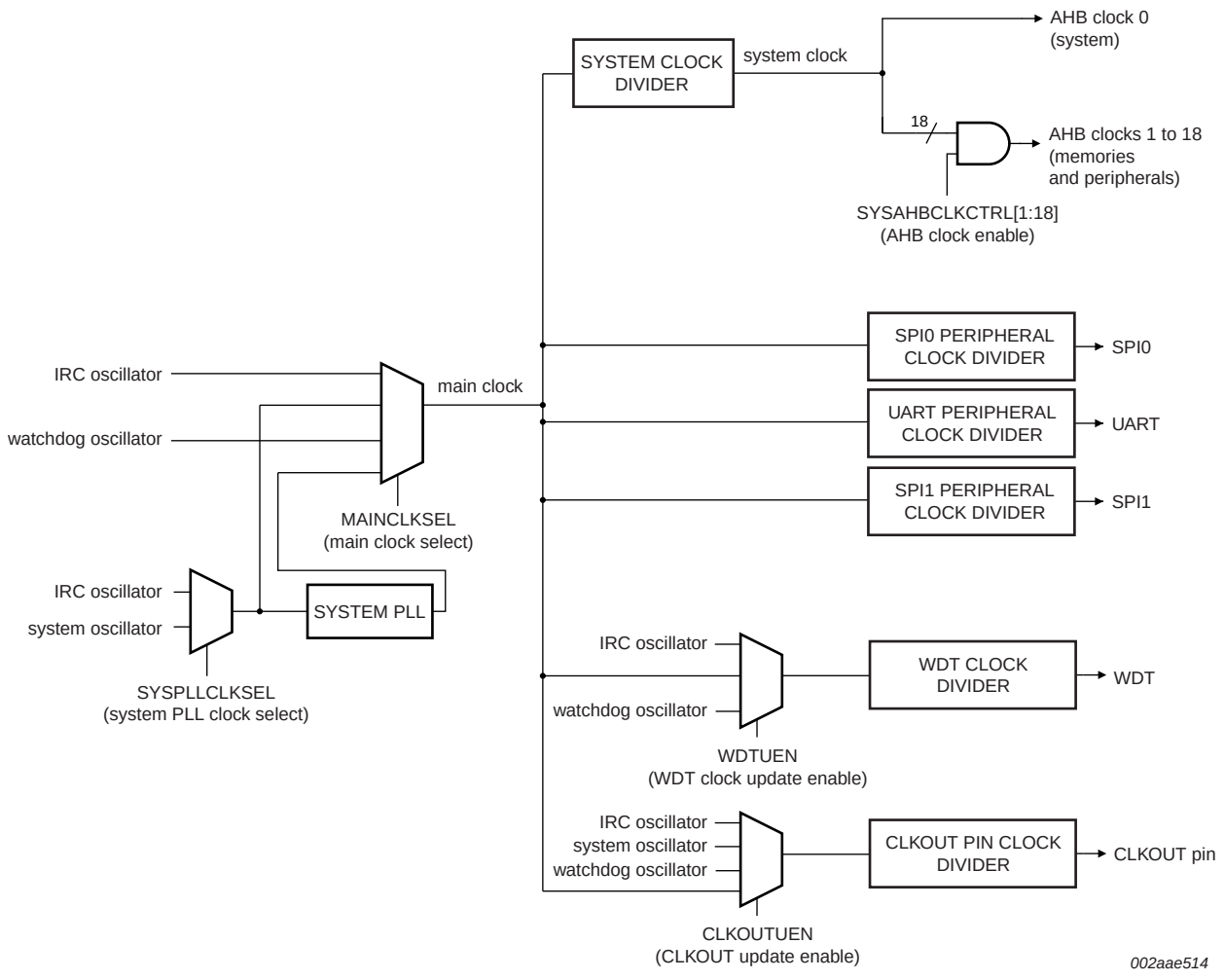

Fig 15. LPC1110/11/12/13/14/15 clock generation block diagram

7.16.1.1 Internal RC oscillator

The IRC may be used as the clock source for the WDT, and/or as the clock that drives the PLL and subsequently the CPU. The nominal IRC frequency is 12 MHz. The IRC is trimmed to 1 % accuracy over the entire voltage and temperature range.

Upon power-up or any chip reset, the LPC1110/11/12/13/14/15 use the IRC as the clock source. Software may later switch to one of the other available clock sources.

7.16.1.2 System oscillator

The system oscillator can be used as the clock source for the CPU, with or without using the PLL.

All information provided in this document is subject to legal disclaimers.

© NXP B.V. 2012. All rights reserved.

The system oscillator operates at frequencies of 1 MHz to 25 MHz. This frequency can be boosted to a higher frequency, up to the maximum CPU operating frequency, by the system PLL.

7.16.1.3 Watchdog oscillator

The watchdog oscillator can be used as a clock source that directly drives the CPU, the watchdog timer, or the CLKOUT pin. The watchdog oscillator nominal frequency is programmable between 9.4 kHz and 2.3 MHz. The frequency spread over processing and temperature is ±40 %.

7.16.2 System PLL

The PLL accepts an input clock frequency in the range of 10 MHz to 25 MHz. The input frequency is multiplied up to a high frequency with a Current Controlled Oscillator (CCO). The multiplier can be an integer value from 1 to 32. The CCO operates in the range of 156 MHz to 320 MHz, so there is an additional divider in the loop to keep the CCO within its frequency range while the PLL is providing the desired output frequency. The PLL output frequency must be lower than 100 MHz. The output divider may be set to divide by 2, 4, 8, or 16 to produce the output clock. Since the minimum output divider value is 2, it is insured that the PLL output has a 50 % duty cycle. The PLL is turned off and bypassed following a chip reset and may be enabled by software. The program must configure and activate the PLL, wait for the PLL to lock, and then connect to the PLL as a clock source. The PLL settling time is 100 μs.

7.16.3 Clock output

The LPC1110/11/12/13/14/15 features a clock output function that routes the IRC oscillator, the system oscillator, the watchdog oscillator, or the main clock to an output pin.

7.16.4 Wake-up process

The LPC1110/11/12/13/14/15 begin operation at power-up and when awakened from Deep power-down mode by using the 12 MHz IRC oscillator as the clock source. This allows chip operation to resume quickly. If the system oscillator or the PLL is needed by the application, software will need to enable these features and wait for them to stabilize before they are used as a clock source.

7.16.5 Power control

The LPC1110/11/12/13/14/15 support a variety of power control features. There are three special modes of processor power reduction: Sleep mode, Deep-sleep mode, and Deep power-down mode. The CPU clock rate may also be controlled as needed by changing clock sources, reconfiguring PLL values, and/or altering the CPU clock divider value. This allows a trade-off of power versus processing speed based on application requirements. In addition, a register is provided for shutting down the clocks to individual on-chip peripherals, allowing fine tuning of power consumption by eliminating all dynamic power use in any peripherals that are not required for the application. Selected peripherals have their own clock divider which provides even better power control.

7.16.5.1 Power profiles (LPC1100L and LPC1100XL series only)

The power consumption in Active and Sleep modes can be optimized for the application through simple calls to the power profile. The power configuration routine configures the LPC1110/11/12/13/14/15 for one of the following power modes:

All information provided in this document is subject to legal disclaimers.

© NXP B.V. 2012. All rights reserved.

- Default mode corresponding to power configuration after reset.
- CPU performance mode corresponding to optimized processing capability.
- Efficiency mode corresponding to optimized balance of current consumption and CPU performance.
- Low-current mode corresponding to lowest power consumption.

In addition, the power profile includes routines to select the optimal PLL settings for a given system clock and PLL input clock.

7.16.5.2 Sleep mode

When Sleep mode is entered, the clock to the core is stopped. Resumption from the Sleep mode does not need any special sequence but re-enabling the clock to the ARM core.

In Sleep mode, execution of instructions is suspended until either a reset or interrupt occurs. Peripheral functions continue operation during Sleep mode and may generate interrupts to cause the processor to resume execution. Sleep mode eliminates dynamic power used by the processor itself, memory systems and related controllers, and internal buses.

7.16.5.3 Deep-sleep mode

In Deep-sleep mode, the chip is in Sleep mode, and in addition all analog blocks are shut down. As an exception, the user has the option to keep the watchdog oscillator and the BOD circuit running for self-timed wake-up and BOD protection. Deep-sleep mode allows for additional power savings.

Up to 13 pins total serve as external wake-up pins to the start logic to wake up the chip from Deep-sleep mode.

Unless the watchdog oscillator is selected to run in Deep-sleep mode, the clock source should be switched to IRC before entering Deep-sleep mode, because the IRC can be switched on and off glitch-free.

7.16.5.4 Deep power-down mode

In Deep power-down mode, power is shut off to the entire chip with the exception of the WAKEUP pin. The LPC1110/11/12/13/14/15 can wake up from Deep power-down mode via the WAKEUP pin.

A LOW-going pulse as short as 50 ns wakes up the part from Deep power-down mode.

When entering Deep power-down mode, an external pull-up resistor is required on the WAKEUP pin to hold it HIGH. The $\overline{\text{RESET}}$ pin must also be held HIGH to prevent it from floating while in Deep power-down mode.

7.17 System control

7.17.1 Start logic

The start logic connects external pins to corresponding interrupts in the NVIC. Each pin shown in Table 8 to Table 9 as input to the start logic has an individual interrupt in the NVIC interrupt vector table. The start logic pins can serve as external interrupt pins when the chip is running. In addition, an input signal on the start logic pins can wake up the chip from Deep-sleep mode when all clocks are shut down.

All information provided in this document is subject to legal disclaimers.

© NXP B.V. 2012. All rights reserved.

The start logic must be configured in the system configuration block and in the NVIC before being used.

7.17.2 Reset

Reset has four sources on the LPC1110/11/12/13/14/15: the $\overline{\text{RESET}}$ pin, the Watchdog reset, Power-On Reset (POR), and the BrownOut Detection (BOD) circuit. The $\overline{\text{RESET}}$ pin is a Schmitt trigger input pin. Assertion of chip reset by any source, once the operating voltage attains a usable level, starts the IRC and initializes the flash controller.

A LOW-going pulse as short as 50 ns resets the part.

When the internal Reset is removed, the processor begins executing at address 0, which is initially the Reset vector mapped from the boot block. At that point, all of the processor and peripheral registers have been initialized to predetermined values.

An external pull-up resistor is required on the $\overline{\text{RESET}}$ pin if Deep power-down mode is used.

7.17.3 Brownout detection

The LPC1110/11/12/13/14/15 includes up to four levels for monitoring the voltage on the V_{DD} pin. If this voltage falls below one of the selected levels, the BOD asserts an interrupt signal to the NVIC. This signal can be enabled for interrupt in the Interrupt Enable Register in the NVIC in order to cause a CPU interrupt; if not, software can monitor the signal by reading a dedicated status register. Four threshold levels can be selected to cause a forced reset of the chip.

7.17.4 Code security (Code Read Protection - CRP)

This feature of the LPC1110/11/12/13/14/15 allows user to enable different levels of security in the system so that access to the on-chip flash and use of the Serial Wire Debugger (SWD) and In-System Programming (ISP) can be restricted. When needed, CRP is invoked by programming a specific pattern into a dedicated flash location. IAP commands are not affected by the CRP.

In addition, ISP entry via the PIO0_1 pin can be disabled without enabling CRP. For details see the *LPC111x user manual*.

There are three levels of Code Read Protection:

1. CRP1 disables access to the chip via the SWD and allows partial flash update (excluding flash sector 0) using a limited set of the ISP commands. This mode is useful when CRP is required and flash field updates are needed but all sectors can not be erased.
2. CRP2 disables access to the chip via the SWD and only allows full flash erase and update using a reduced set of the ISP commands.
3. Running an application with level CRP3 selected fully disables any access to the chip via the SWD pins and the ISP. This mode effectively disables ISP override using PIO0_1 pin, too. It is up to the user's application to provide (if needed) flash update mechanism using IAP calls or call reinvoke ISP command to enable flash update via the UART.

All information provided in this document is subject to legal disclaimers.

© NXP B.V. 2012. All rights reserved.

CAUTION

If level three Code Read Protection (CRP3) is selected, no future factory testing can be performed on the device.

In addition to the three CRP levels, sampling of pin PIO0_1 for valid user code can be disabled. For details see the *LPC111x user manual*.

7.17.5 APB interface

The APB peripherals are located on one APB bus.

7.17.6 AHBLite

The AHBLite connects the CPU bus of the ARM Cortex-M0 to the flash memory, the main static RAM, and the Boot ROM.

7.17.7 External interrupt inputs

All GPIO pins can be level or edge sensitive interrupt inputs. In addition, start logic inputs serve as external interrupts (see Section 7.17.1).

7.18 Emulation and debugging

Debug functions are integrated into the ARM Cortex-M0. Serial wire debug with four breakpoints and two watchpoints is supported.

All information provided in this document is subject to legal disclaimers.

© NXP B.V. 2012. All rights reserved.

8. Limiting values

Table 12. Limiting values

In accordance with the Absolute Maximum Rating System (IEC 60134).[1]

Symbol	Parameter	Conditions		Min	Max	Unit
V_{DD}	supply voltage (core and external rail)			1.8	3.6	V
V_I	input voltage	5 V tolerant I/O pins; only valid when the V_{DD} supply voltage is present	[2]	–0.5	+5.5	V
I_{DD}	supply current	per supply pin		-	100	mA
I_{SS}	ground current	per ground pin		-	100	mA
I_{latch}	I/O latch-up current	$-(0.5V_{DD}) < V_I < (1.5V_{DD})$; $T_j < 125$ °C		-	100	mA
T_{stg}	storage temperature	non-operating	[3]	–65	+150	°C
$T_{j(max)}$	maximum junction temperature			-	150	°C
$P_{tot(pack)}$	total power dissipation (per package)	based on package heat transfer, not device power consumption		-	1.5	W
V_{ESD}	electrostatic discharge voltage	human body model; all pins	[4]	–6500	+6500	V

[1] The following applies to the limiting values:

a) This product includes circuitry specifically designed for the protection of its internal devices from the damaging effects of excessive static charge. Nonetheless, it is suggested that conventional precautions be taken to avoid applying greater than the rated maximum.

b) Parameters are valid over operating temperature range unless otherwise specified. All voltages are with respect to V_{SS} unless otherwise noted.

[2] Including voltage on outputs in 3-state mode.

[3] The maximum non-operating storage temperature is different than the temperature for required shelf life which should be determined based on required shelf lifetime. Please refer to the JEDEC spec (J-STD-033B.1) for further details.

[4] Human body model: equivalent to discharging a 100 pF capacitor through a 1.5 kΩ series resistor.

All information provided in this document is subject to legal disclaimers.

© NXP B.V. 2012. All rights reserved.

9. Static characteristics

Table 13. Static characteristics

T_{amb} = −40 °C to +85 °C, unless otherwise specified.

Symbol	Parameter	Conditions		Min	Typ[1]	Max	Unit
V_{DD}	supply voltage (core and external rail)			1.8	3.3	3.6	V
LPC1100 series (LPC111x/101/201/301) power consumption							
I_{DD}	supply current	Active mode; code `while(1){}` executed from flash					
		system clock = 12 MHz; V_{DD} = 3.3 V	[2][3][4][6][7]	-	3	-	mA
		system clock = 50 MHz; V_{DD} = 3.3 V	[2][3][6][7][8]	-	9	-	mA
		Sleep mode; system clock = 12 MHz; V_{DD} = 3.3 V	[2][3][4][6][7]	-	2	-	mA
		Deep-sleep mode; V_{DD} = 3.3 V	[2][3][9]	-	6	-	μA
		Deep power-down mode; V_{DD} = 3.3 V	[2][10]	-	220	-	nA
LPC1100L series (LPC111x/002/102/202/302) power consumption in low-current mode[11]							
I_{DD}	supply current	Active mode; code while(1){} executed from flash					
		system clock = 1 MHz; V_{DD} = 3.3 V	[2][3][5][6][7]	-	840	-	μA
		system clock = 6 MHz; V_{DD} = 3.3 V	[2][3][5][6][7]	-	1	-	mA
		system clock = 12 MHz; V_{DD} = 3.3 V	[2][3][4][6][7]	-	2	-	mA
		system clock = 50 MHz; V_{DD} = 3.3 V	[2][3][6][7][8]	-	7	-	mA
		Sleep mode; system clock = 12 MHz; V_{DD} = 3.3 V	[2][3][4][6][7]	-	1	-	mA
		system clock = 50 MHz; V_{DD} = 3.3 V	[2][3][4][6][7]	-	5	-	mA
		Deep-sleep mode; V_{DD} = 3.3 V	[2][3][9]	-	2	-	μA
		Deep power-down mode; V_{DD} = 3.3 V	[2][10]	-	220	-	nA

All information provided in this document is subject to legal disclaimers.

© NXP B.V. 2012. All rights reserved.

Table 13. Static characteristics *...continued*

T_{amb} = −40 °C to +85 °C, unless otherwise specified.

Symbol	Parameter	Conditions		Min	Typ[1]	Max	Unit
LPC1100XL series (LPC111x/103/203/303/323/333) power consumption in low-current mode[11]							
I_{DD}	supply current	Active mode; code `while(1){}` executed from flash					
		system clock = 3 MHz; V_{DD} = 3.3 V	[2][3][5][6][7]	-	600	-	μA
		system clock = 6 MHz; V_{DD} = 3.3 V	[2][3][5][6][7]	-	850	-	μA
		system clock = 12 MHz; V_{DD} = 3.3 V	[2][3][4][6][7]	-	1.4	-	mA
		system clock = 50 MHz; V_{DD} = 3.3 V	[2][3][6][7][8]	-	5.8	-	mA
		Sleep mode; system clock = 12 MHz; V_{DD} = 3.3 V	[2][3][4][6][7]	-	700	-	μA
		system clock = 50 MHz; V_{DD} = 3.3 V	[2][3][4][6][7]	-	2.2	-	mA
		Deep-sleep mode; V_{DD} = 3.3 V	[2][3][9]	-	1.8	-	μA
		Deep power-down mode; V_{DD} = 3.3 V	[2][10]	-	220	-	nA
Standard port pins, $\overline{RESET}$							
I_{IL}	LOW-level input current	V_I = 0 V; on-chip pull-up resistor disabled		-	0.5	10	nA
I_{IH}	HIGH-level input current	V_I = V_{DD}; on-chip pull-down resistor disabled		-	0.5	10	nA
I_{OZ}	OFF-state output current	V_O = 0 V; V_O = V_{DD}; on-chip pull-up/down resistors disabled		-	0.5	10	nA
V_I	input voltage	pin configured to provide a digital function	[12][13][14]	0	-	5.0	V
V_O	output voltage	output active		0	-	V_{DD}	V
V_{IH}	HIGH-level input voltage			0.7V_{DD}	-	-	V
V_{IL}	LOW-level input voltage			-	-	0.3V_{DD}	V
V_{hys}	hysteresis voltage			-	0.4	-	V
V_{OH}	HIGH-level output voltage	2.5 V ≤ V_{DD} ≤ 3.6 V; I_{OH} = −4 mA		V_{DD} − 0.4	-	-	V
		1.8 V ≤ V_{DD} < 2.5 V; I_{OH} = −3 mA		V_{DD} − 0.4	-	-	V

All information provided in this document is subject to legal disclaimers.

© NXP B.V. 2012. All rights reserved.

Table 13. Static characteristics *...continued*

T_{amb} = –40 °C to +85 °C, unless otherwise specified.

Symbol	Parameter	Conditions		Min	Typ[1]	Max	Unit
V_{OL}	LOW-level output voltage	2.5 V ≤ V_{DD} ≤ 3.6 V; I_{OL} = 4 mA		-	-	0.4	V
		1.8 V ≤ V_{DD} < 2.5 V; I_{OL} = 3 mA		-	-	0.4	V
I_{OH}	HIGH-level output current	V_{OH} = V_{DD} – 0.4 V; 2.5 V ≤ V_{DD} ≤ 3.6 V		–4	-	-	mA
		1.8 V ≤ V_{DD} < 2.5 V		–3	-	-	mA
I_{OL}	LOW-level output current	V_{OL} = 0.4 V 2.5 V ≤ V_{DD} ≤ 3.6 V		4	-	-	mA
		1.8 V ≤ V_{DD} < 2.5 V		3	-	-	mA
I_{OHS}	HIGH-level short-circuit output current	V_{OH} = 0 V	[15]	-	-	–45	mA
I_{OLS}	LOW-level short-circuit output current	V_{OL} = V_{DD}	[15]	-	-	50	mA
I_{pd}	pull-down current	V_I = 5 V		10	50	150	μA
I_{pu}	pull-up current	V_I = 0 V; 2.0 V ≤ V_{DD} ≤ 3.6 V		–15	–50	–85	μA
		1.8 V ≤ V_{DD} < 2.0 V		–10	–50	–85	μA
		V_{DD} < V_I < 5 V		0	0	0	μA
High-drive output pin (PIO0_7)							
I_{IL}	LOW-level input current	V_I = 0 V; on-chip pull-up resistor disabled		-	0.5	10	nA
I_{IH}	HIGH-level input current	V_I = V_{DD}; on-chip pull-down resistor disabled		-	0.5	10	nA
I_{OZ}	OFF-state output current	V_O = 0 V; V_O = V_{DD}; on-chip pull-up/down resistors disabled		-	0.5	10	nA
V_I	input voltage	pin configured to provide a digital function	[12][13] [14]	0	-	5.0	V
V_O	output voltage	output active		0	-	V_{DD}	V
V_{IH}	HIGH-level input voltage			0.7V_{DD}	-	-	V
V_{IL}	LOW-level input voltage			-	-	0.3V_{DD}	V
V_{hys}	hysteresis voltage			0.4	-	-	V
V_{OH}	HIGH-level output voltage	2.5 V ≤ V_{DD} ≤ 3.6 V; I_{OH} = –20 mA		V_{DD} – 0.4	-	-	V
		1.8 V ≤ V_{DD} < 2.5 V; I_{OH} = –12 mA		V_{DD} – 0.4	-	-	V
V_{OL}	LOW-level output voltage	2.5 V ≤ V_{DD} ≤ 3.6 V; I_{OL} = 4 mA		-	-	0.4	V
		1.8 V ≤ V_{DD} < 2.5 V; I_{OL} = 3 mA		-	-	0.4	V

All information provided in this document is subject to legal disclaimers.

© NXP B.V. 2012. All rights reserved.

Table 13. Static characteristics *...continued*

T_{amb} = −40 °C to +85 °C, unless otherwise specified.

Symbol	Parameter	Conditions		Min	Typ[1]	Max	Unit
I_{OH}	HIGH-level output current	$V_{OH} = V_{DD} - 0.4$ V; 2.5 V ≤ V_{DD} ≤ 3.6 V		20	-	-	mA
		1.8 V ≤ V_{DD} < 2.5 V		12	-	-	mA
I_{OL}	LOW-level output current	V_{OL} = 0.4 V 2.5 V ≤ V_{DD} ≤ 3.6 V		4	-	-	mA
		1.8 V ≤ V_{DD} < 2.5 V		3	-	-	mA
I_{OLS}	LOW-level short-circuit output current	$V_{OL} = V_{DD}$	[15]	-	-	50	mA
I_{pd}	pull-down current	V_I = 5 V		10	50	150	μA
I_{pu}	pull-up current	V_I = 0 V 2.0 V ≤ V_{DD} ≤ 3.6 V		−15	−50	−85	μA
		1.8 V ≤ V_{DD} < 2.0 V		−10	−50	−85	μA
		$V_{DD} < V_I$ < 5 V		0	0	0	μA
I^2C-bus pins (PIO0_4 and PIO0_5)							
V_{IH}	HIGH-level input voltage			$0.7V_{DD}$	-	-	V
V_{IL}	LOW-level input voltage			-	-	$0.3V_{DD}$	V
V_{hys}	hysteresis voltage			-	$0.05V_{DD}$	-	V
I_{OL}	LOW-level output current	V_{OL} = 0.4 V; I^2C-bus pins configured as standard mode pins 2.5 V ≤ V_{DD} ≤ 3.6 V		3.5	-	-	mA
		1.8 V ≤ V_{DD} < 2.5 V		3	-	-	
I_{OL}	LOW-level output current	V_{OL} = 0.4 V; I^2C-bus pins configured as Fast-mode Plus pins 2.5 V ≤ V_{DD} ≤ 3.6 V		20	-	-	mA
		1.8 V ≤ V_{DD} < 2.5 V		16	-	-	
I_{LI}	input leakage current	$V_I = V_{DD}$	[16]	-	2	4	μA
		V_I = 5 V		-	10	22	μA
Oscillator pins							
$V_{i(xtal)}$	crystal input voltage			−0.5	1.8	1.95	V
$V_{o(xtal)}$	crystal output voltage			−0.5	1.8	1.95	V

[1] Typical ratings are not guaranteed. The values listed are at room temperature (25 °C), nominal supply voltages.

[2] T_{amb} = 25 °C.

[3] I_{DD} measurements were performed with all pins configured as GPIO outputs driven LOW and pull-up resistors disabled.

[4] IRC enabled; system oscillator disabled; system PLL disabled.

[5] System oscillator enabled; IRC disabled; system PLL disabled.

[6] BOD disabled.

[7] All peripherals disabled in the SYSAHBCLKCTRL register. Peripheral clocks to UART and SPI0/1 disabled in system configuration block.

[8] IRC disabled; system oscillator enabled; system PLL enabled.

[9] All oscillators and analog blocks turned off in the PDSLEEPCFG register; PDSLEEPCFG = 0x0000 18FF.

All information provided in this document is subject to legal disclaimers.

© NXP B.V. 2012. All rights reserved.

[10] WAKEUP pin pulled HIGH externally.

[11] Low-current mode PWR_LOW_CURRENT selected when running the set_power routine in the power profiles.

[12] Including voltage on outputs in 3-state mode.

[13] V_{DD} supply voltage must be present.

[14] 3-state outputs go into 3-state mode in Deep power-down mode.

[15] Allowed as long as the current limit does not exceed the maximum current allowed by the device.

[16] To V_{SS}.

Table 14. ADC static characteristics

T_{amb} = −40 °C to +85 °C unless otherwise specified; ADC frequency 4.5 MHz, V_{DD} = 2.5 V to 3.6 V.

Symbol	Parameter	Conditions		Min	Typ	Max	Unit
V_{IA}	analog input voltage			0	-	V_{DD}	V
C_{ia}	analog input capacitance			-	-	1	pF
E_D	differential linearity error		[1][2]	-	-	± 1	LSB
$E_{L(adj)}$	integral non-linearity		[3]	-	-	± 1.5	LSB
E_O	offset error		[4]	-	-	± 3.5	LSB
E_G	gain error		[5]	-	-	0.6	%
E_T	absolute error		[6]	-	-	± 4	LSB
R_{vsi}	voltage source interface resistance			-	-	40	kΩ
R_i	input resistance		[7][8]	-	-	2.5	MΩ

[1] The ADC is monotonic, there are no missing codes.

[2] The differential linearity error (E_D) is the difference between the actual step width and the ideal step width. See Figure 16.

[3] The integral non-linearity ($E_{L(adj)}$) is the peak difference between the center of the steps of the actual and the ideal transfer curve after appropriate adjustment of gain and offset errors. See Figure 16.

[4] The offset error (E_O) is the absolute difference between the straight line which fits the actual curve and the straight line which fits the ideal curve. See Figure 16.

[5] The gain error (E_G) is the relative difference in percent between the straight line fitting the actual transfer curve after removing offset error, and the straight line which fits the ideal transfer curve. See Figure 16.

[6] The absolute error (E_T) is the maximum difference between the center of the steps of the actual transfer curve of the non-calibrated ADC and the ideal transfer curve. See Figure 16.

[7] T_{amb} = 25 °C; maximum sampling frequency f_s = 400 kSamples/s and analog input capacitance C_{ia} = 1 pF.

[8] Input resistance R_i depends on the sampling frequency f_s: $R_i = 1 / (f_s \times C_{ia})$.

All information provided in this document is subject to legal disclaimers.

© NXP B.V. 2012. All rights reserved.

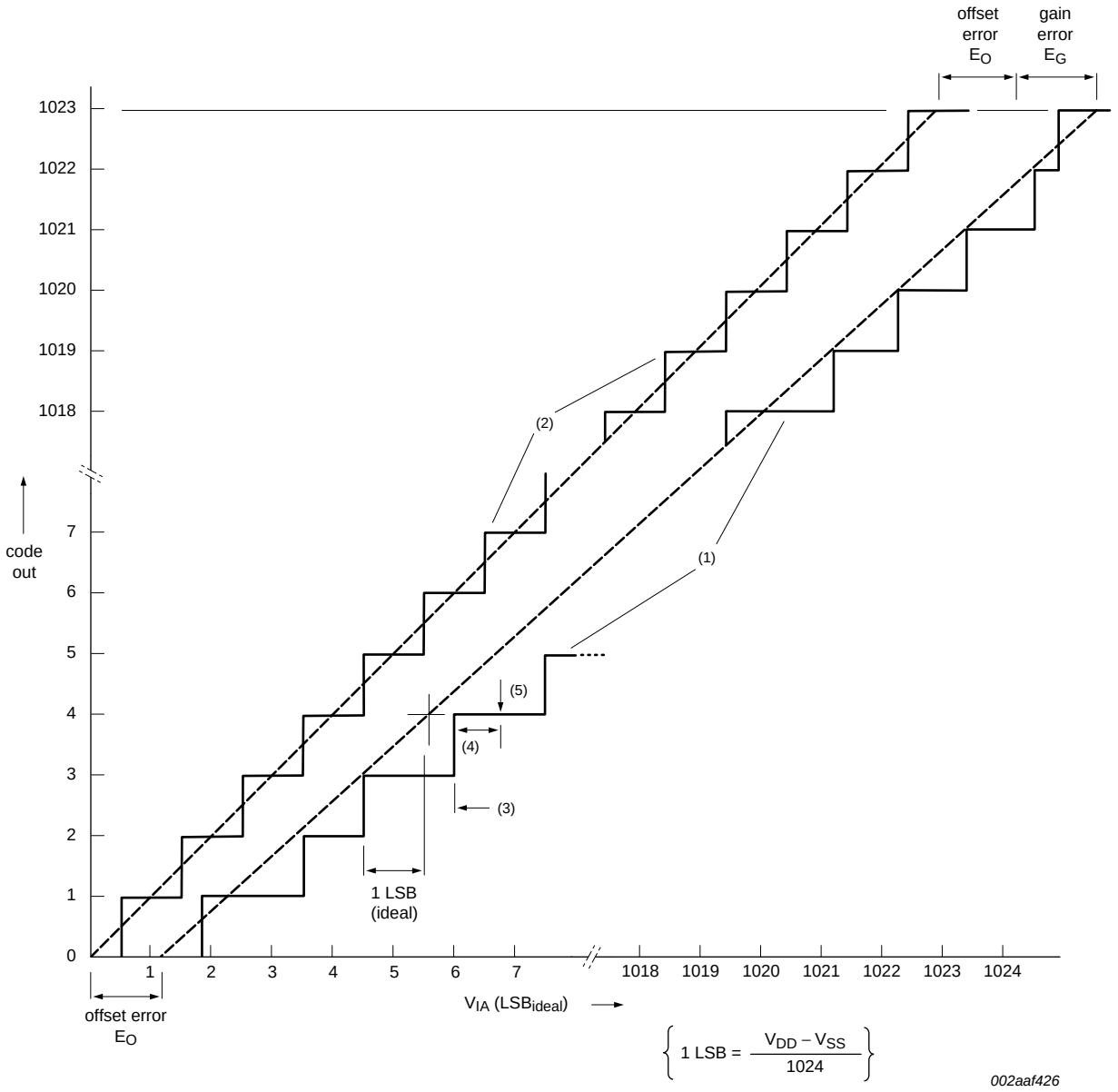

(1) Example of an actual transfer curve.

(2) The ideal transfer curve.

(3) Differential linearity error (E_D).

(4) Integral non-linearity ($E_{L(adj)}$).

(5) Center of a step of the actual transfer curve.

Fig 16. ADC characteristics

All information provided in this document is subject to legal disclaimers.

© NXP B.V. 2012. All rights reserved.

9.1 BOD static characteristics

Table 15. BOD static characteristics[1]

T_{amb} = 25 °C.

Symbol	Parameter	Conditions	Min	Typ	Max	Unit
V_{th}	threshold voltage	interrupt level 1				
		assertion	-	2.22	-	V
		de-assertion	-	2.35	-	V
		interrupt level 2				
		assertion	-	2.52	-	V
		de-assertion	-	2.66	-	V
		interrupt level 3				
		assertion	-	2.80	-	V
		de-assertion	-	2.90	-	V
		reset level 0				
		assertion	-	1.46	-	V
		de-assertion	-	1.63	-	V
		reset level 1				
		assertion	-	2.06	-	V
		de-assertion	-	2.15	-	V
		reset level 2				
		assertion	-	2.35	-	V
		de-assertion	-	2.43	-	V
		reset level 3				
		assertion	-	2.63	-	V
		de-assertion	-	2.71	-	V

[1] Interrupt levels are selected by writing the level value to the BOD control register BODCTRL, see *LPC111x user manual*.

All information provided in this document is subject to legal disclaimers.

© NXP B.V. 2012. All rights reserved.

9.2 Power consumption LPC1100 series (LPC111x/101/201/301)

Power measurements in Active, Sleep, and Deep-sleep modes were performed under the following conditions (see *LPC111x user manual*):

- Configure all pins as GPIO with pull-up resistor disabled in the IOCONFIG block.
- Configure GPIO pins as outputs using the GPIOnDIR registers.
- Write 0 to all GPIOnDATA registers to drive the outputs LOW.

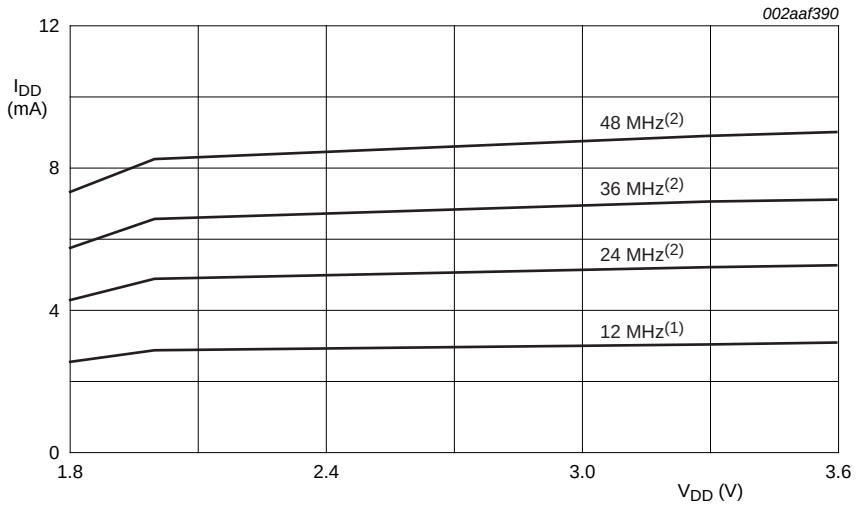

Conditions: T_{amb} = 25 °C; active mode entered executing code `while(1){}` from flash; all peripherals disabled in the SYSAHBCLKCTRL register (SYSAHBCLKCTRL = 0x1F); all peripheral clocks disabled; internal pull-up resistors disabled; BOD disabled.

(1) System oscillator and system PLL disabled; IRC enabled.

(2) System oscillator and system PLL enabled; IRC disabled.

Fig 17. Active mode: Typical supply current I_{DD} versus supply voltage V_{DD} for different system clock frequencies (for LPC111x/101/201/301)

All information provided in this document is subject to legal disclaimers.

© NXP B.V. 2012. All rights reserved.

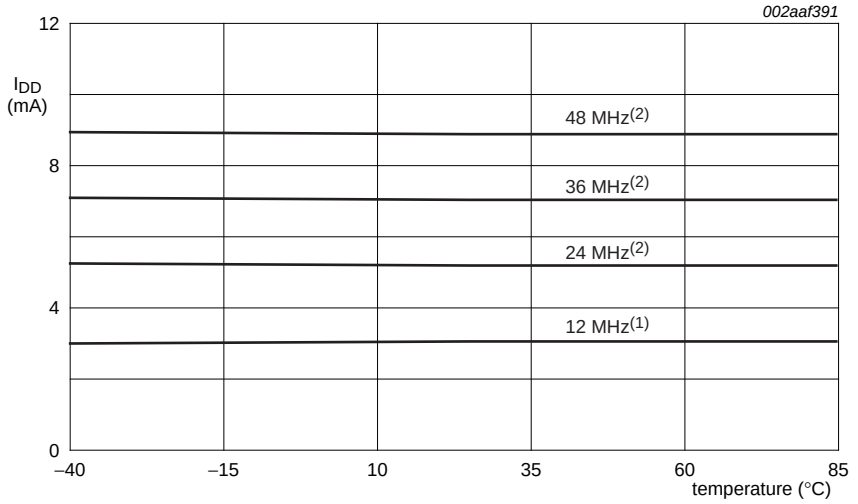

Conditions: V_{DD} = 3.3 V; active mode entered executing code `while(1){}` from flash; all peripherals disabled in the SYSAHBCLKCTRL register (SYSAHBCLKCTRL = 0x1F); all peripheral clocks disabled; internal pull-up resistors disabled; BOD disabled.

(1) System oscillator and system PLL disabled; IRC enabled.

(2) System oscillator and system PLL enabled; IRC disabled.

Fig 18. Active mode: Typical supply current I_{DD} versus temperature for different system clock frequencies (for LPC111x/101/201/301)

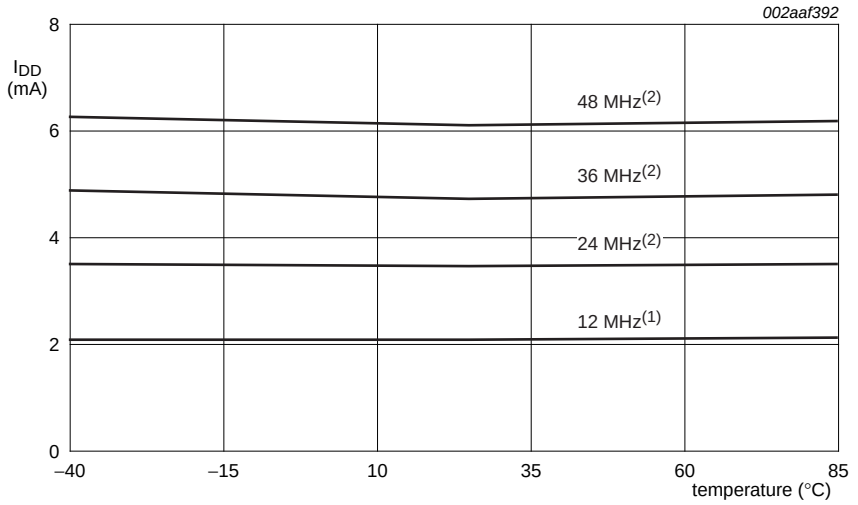

Conditions: V_{DD} = 3.3 V; sleep mode entered from flash; all peripherals disabled in the SYSAHBCLKCTRL register (SYSAHBCLKCTRL = 0x1F); all peripheral clocks disabled; internal pull-up resistors disabled; BOD disabled.

(1) System oscillator and system PLL disabled; IRC enabled.

(2) System oscillator and system PLL enabled; IRC disabled.

Fig 19. Sleep mode: Typical supply current I_{DD} versus temperature for different system clock frequencies (for LPC111x/101/201/301)

All information provided in this document is subject to legal disclaimers.

© NXP B.V. 2012. All rights reserved.

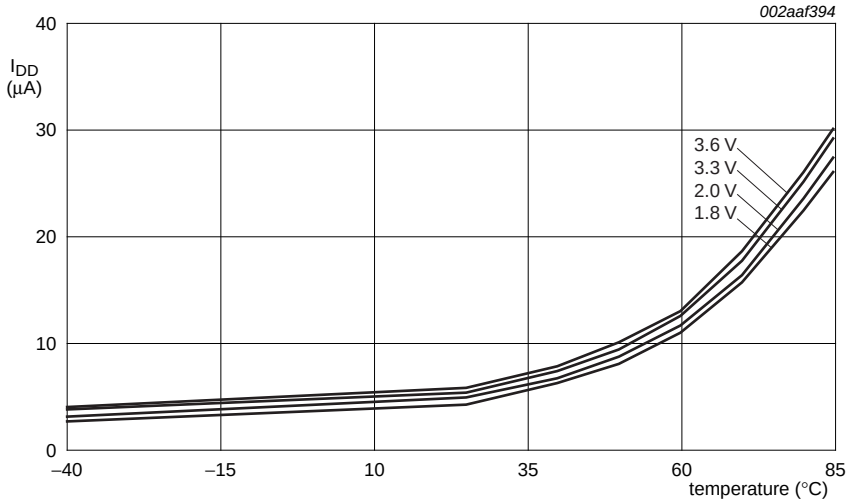

Conditions: BOD disabled; all oscillators and analog blocks disabled in the PDSLEEPCFG register (PDSLEEPCFG = 0x0000 18FF).

Fig 20. Deep-sleep mode: Typical supply current I_{DD} versus temperature for different supply voltages V_{DD} (for LPC111x/101/201/301)

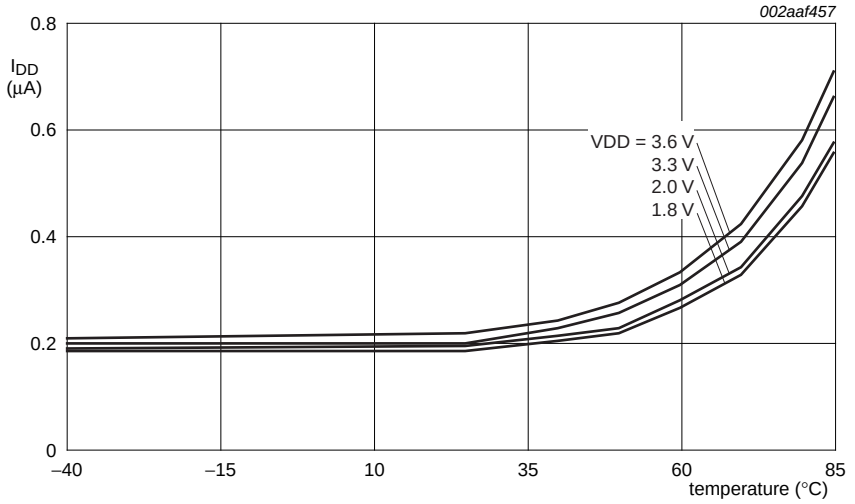

Fig 21. Deep power-down mode: Typical supply current I_{DD} versus temperature for different supply voltages V_{DD} (for LPC111x/101/201/301)

All information provided in this document is subject to legal disclaimers.

© NXP B.V. 2012. All rights reserved.

9.3 Power consumption LPC1100L series (LPC111x/002/102/202/302)

Power measurements in Active, Sleep, and Deep-sleep modes were performed under the following conditions (see *LPC111x user manual*):

- Configure all pins as GPIO with pull-up resistor disabled in the IOCONFIG block.
- Configure GPIO pins as outputs using the GPIOnDIR registers.
- Write 0 to all GPIOnDATA registers to drive the outputs LOW.

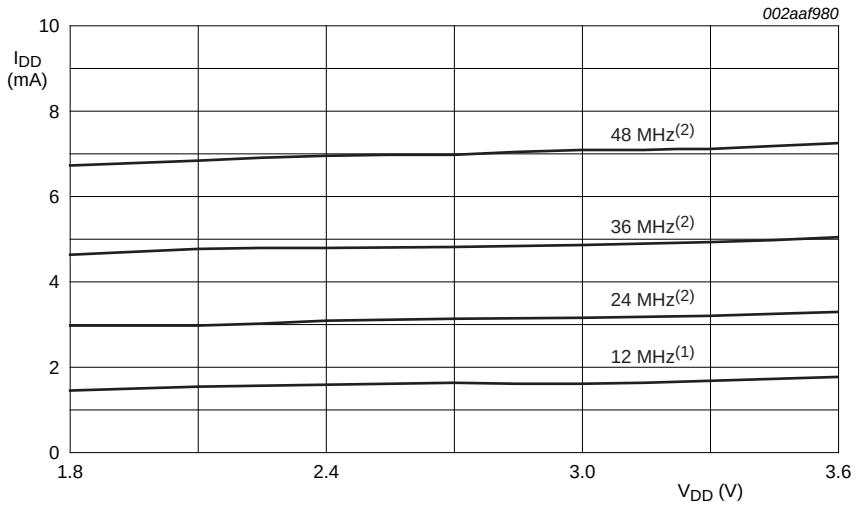

Conditions: T_{amb} = 25 °C; active mode entered executing code `while(1){}` from flash; all peripherals disabled in the SYSAHBCLKCTRL register (SYSAHBCLKCTRL = 0x1F); all peripheral clocks disabled; internal pull-up resistors disabled; BOD disabled; low-current mode.

(1) System oscillator and system PLL disabled; IRC enabled.

(2) System oscillator and system PLL enabled; IRC disabled.

Fig 22. Active mode: Typical supply current I_{DD} versus supply voltage V_{DD} for different system clock frequencies (for LPC111x/002/102/202/302)

All information provided in this document is subject to legal disclaimers.

© NXP B.V. 2012. All rights reserved.

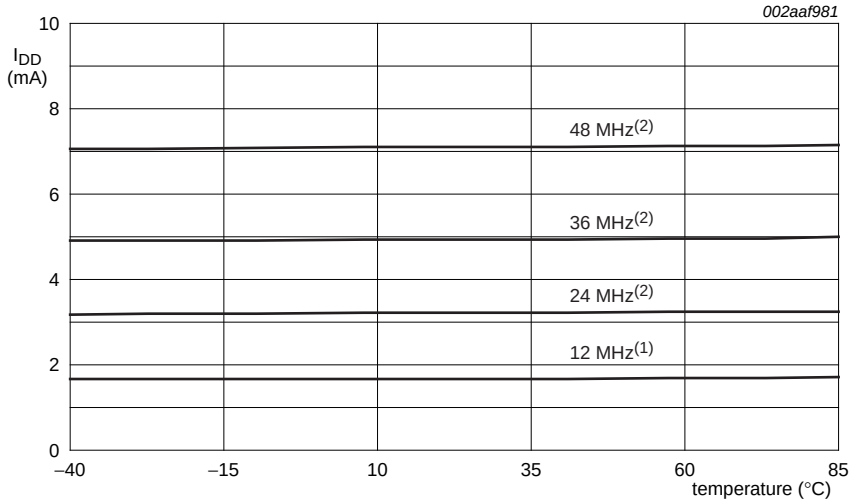

Conditions: V_{DD} = 3.3 V; active mode entered executing code `while(1){}` from flash; all peripherals disabled in the SYSAHBCLKCTRL register (SYSAHBCLKCTRL = 0x1F); all peripheral clocks disabled; internal pull-up resistors disabled; BOD disabled; low-current mode.

(1) System oscillator and system PLL disabled; IRC enabled.

(2) System oscillator and system PLL enabled; IRC disabled.

Fig 23. Active mode: Typical supply current I_{DD} versus temperature for different system clock frequencies (for LPC111x/002/102/202/302)

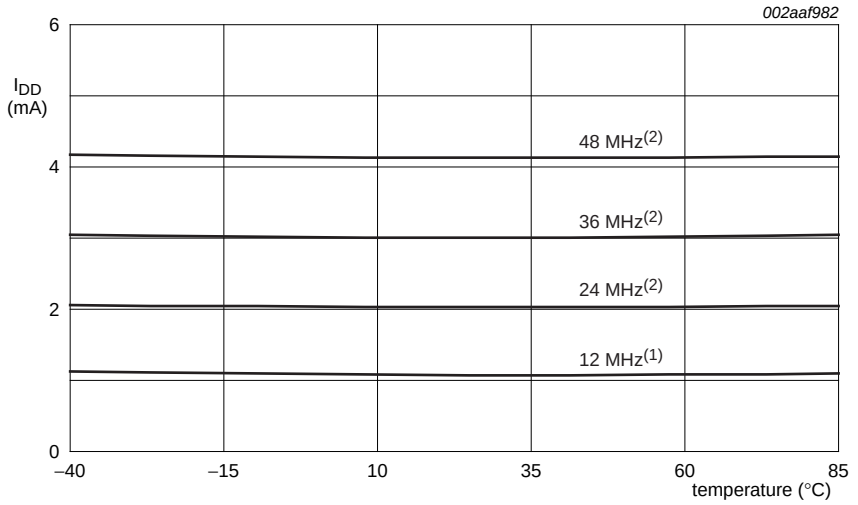

Conditions: V_{DD} = 3.3 V; sleep mode entered from flash; all peripherals disabled in the SYSAHBCLKCTRL register (SYSAHBCLKCTRL = 0x1F); all peripheral clocks disabled; internal pull-up resistors disabled; BOD disabled; low-current mode.

(1) System oscillator and system PLL disabled; IRC enabled.

(2) System oscillator and system PLL enabled; IRC disabled.

Fig 24. Sleep mode: Typical supply current I_{DD} versus temperature for different system clock frequencies (for LPC111x/002/102/202/302)

All information provided in this document is subject to legal disclaimers.

© NXP B.V. 2012. All rights reserved.

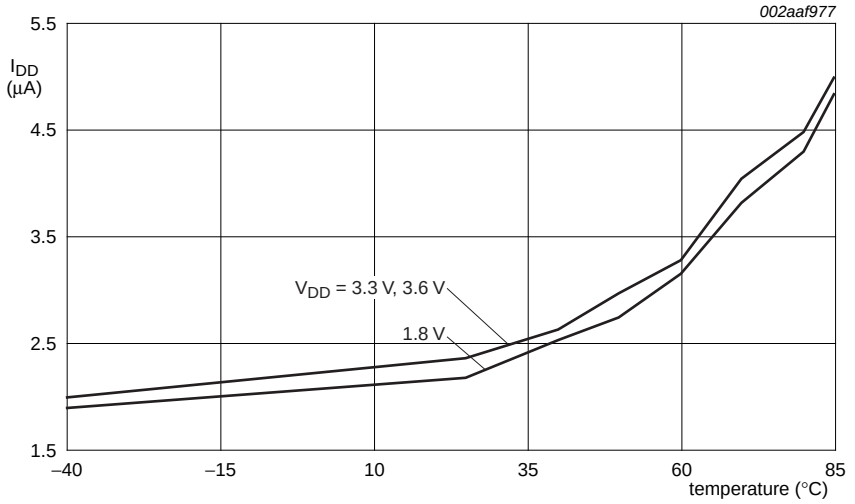

Conditions: BOD disabled; all oscillators and analog blocks disabled in the PDSLEEPCFG register (PDSLEEPCFG = 0x0000 18FF).

Fig 25. Deep-sleep mode: Typical supply current I_{DD} versus temperature for different supply voltages V_{DD} (for LPC111x/002/102/202/302)

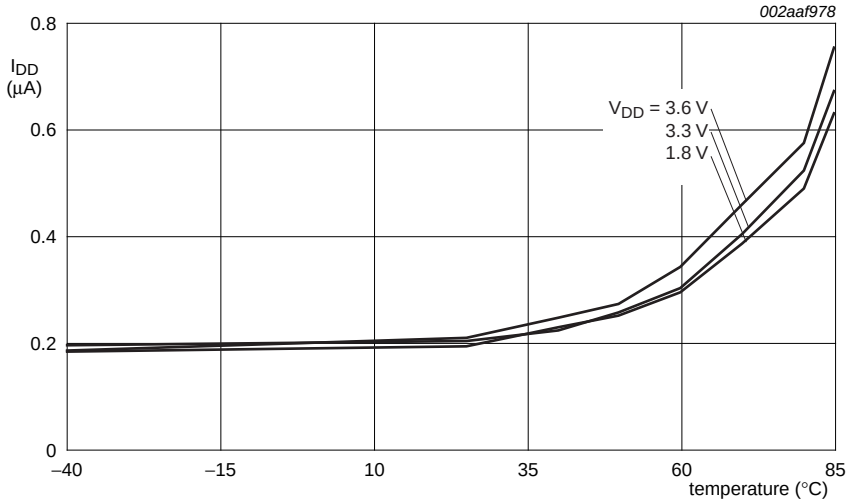

Fig 26. Deep power-down mode: Typical supply current I_{DD} versus temperature for different supply voltages V_{DD} (for LPC111x/002/102/202/302)

All information provided in this document is subject to legal disclaimers.

© NXP B.V. 2012. All rights reserved.

9.4 Power consumption LPC1100XL series (LPC111x/103/203/303/323/333)

Power measurements in Active, Sleep, and Deep-sleep modes were performed under the following conditions (see *LPC111x user manual*):

- Configure all pins as GPIO with pull-up resistor disabled in the IOCONFIG block.
- Configure GPIO pins as outputs using the GPIOnDIR registers.
- Write 0 to all GPIOnDATA registers to drive the outputs LOW.

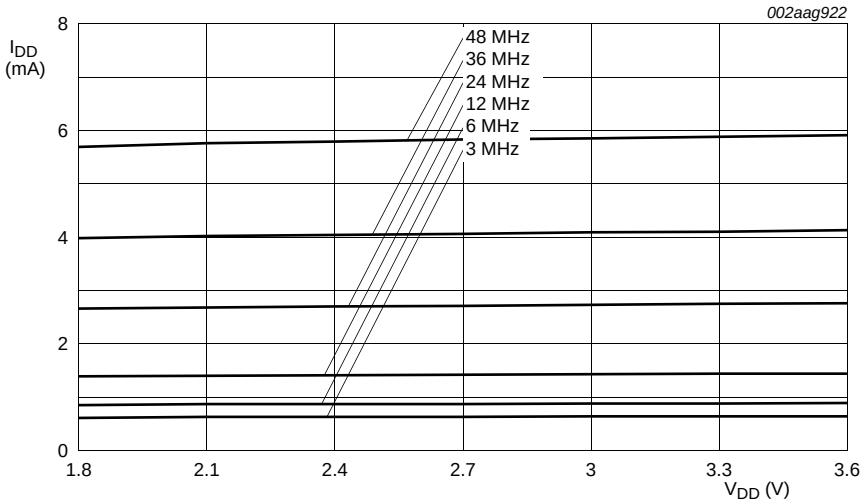

Conditions: T_{amb} = 25 °C; active mode entered executing code `while(1){}` from flash; all peripherals disabled in the SYSAHBCLKCTRL register (SYSAHBCLKCTRL = 0x1F); all peripheral clocks disabled; internal pull-up resistors disabled; BOD disabled; low-current mode.

3 MHz - 6 MHz: system oscillator enabled; PLL, IRC disabled.

12 MHz: IRC enabled; system oscillator, PLL disabled.

24 MHz - 48 MHz: IRC disabled; system oscillator, PLL enabled.

Fig 27. Active mode: Typical supply current I_{DD} versus supply voltage V_{DD} for different system clock frequencies (for LPC111x/103/203/303/323/333)

All information provided in this document is subject to legal disclaimers.

© NXP B.V. 2012. All rights reserved.

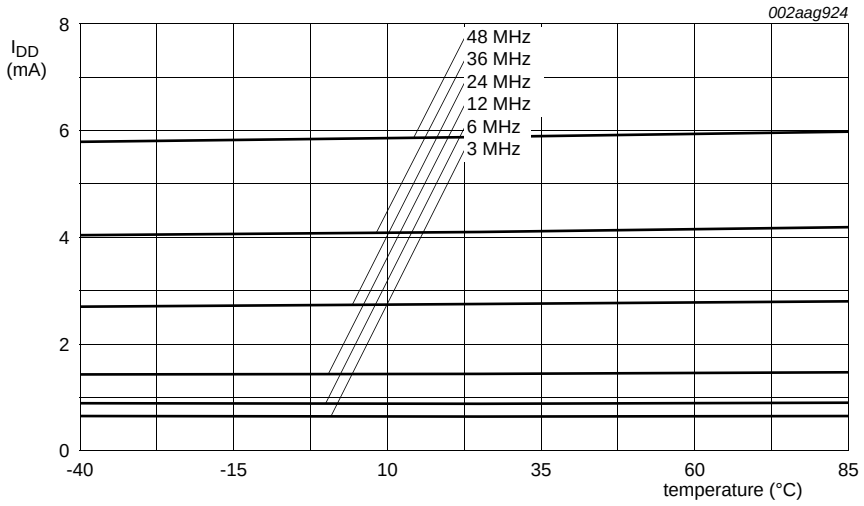

Conditions: V_{DD} = 3.3 V; active mode entered executing code `while(1){}` from flash; all peripherals disabled in the SYSAHBCLKCTRL register (SYSAHBCLKCTRL = 0x1F); all peripheral clocks disabled; internal pull-up resistors disabled; BOD disabled; low-current mode.

3 MHz - 6 MHz: system oscillator enabled; PLL, IRC disabled.

12 MHz: IRC enabled; system oscillator, PLL disabled.

24 MHz - 48 MHz: IRC disabled; system oscillator, PLL enabled.

Fig 28. Active mode: Typical supply current I_{DD} versus temperature for different system clock frequencies (for LPC111x/103/203/303/323/333)

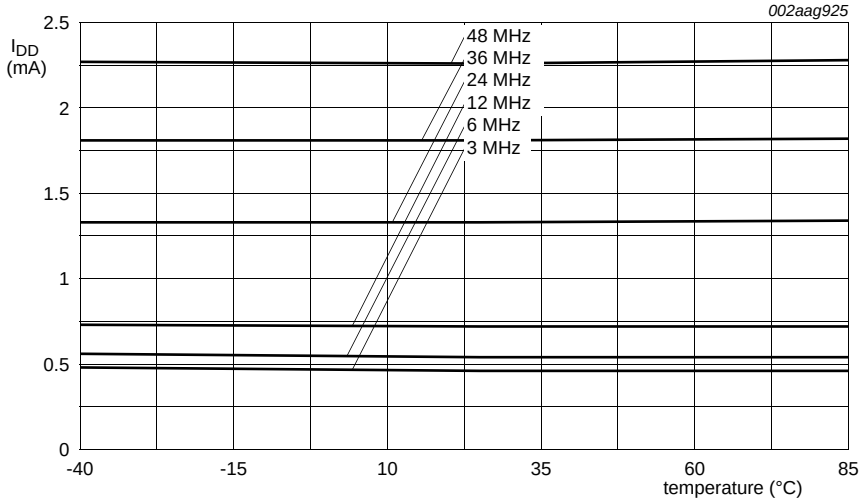

Conditions: V_{DD} = 3.3 V; sleep mode entered from flash; all peripherals disabled in the SYSAHBCLKCTRL register (SYSAHBCLKCTRL = 0x1F); all peripheral clocks disabled; internal pull-up resistors disabled; BOD disabled; low-current mode.

3 MHz - 6 MHz: system oscillator enabled; PLL, IRC disabled.

12 MHz: IRC enabled; system oscillator, PLL disabled.

24 MHz - 48 MHz: IRC disabled; system oscillator, PLL enabled.

Fig 29. Sleep mode: Typical supply current I_{DD} versus temperature for different system clock frequencies (for LPC111x/103/203/303/323/333)

All information provided in this document is subject to legal disclaimers.

© NXP B.V. 2012. All rights reserved.

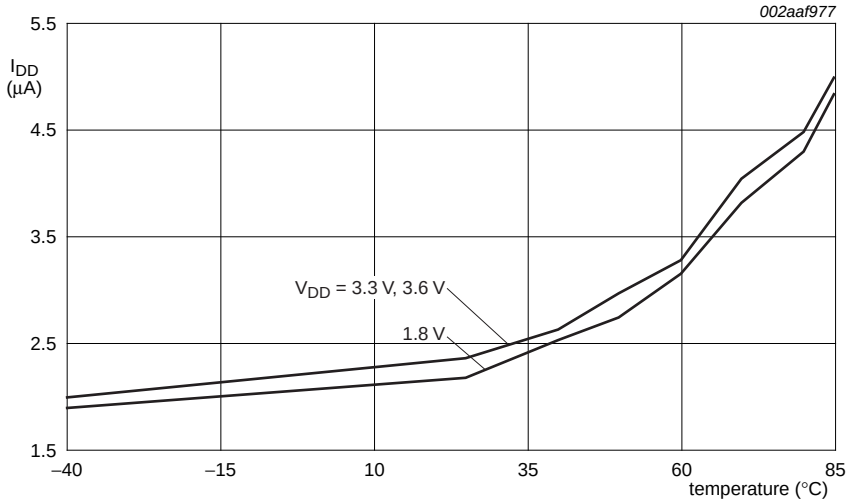

Conditions: BOD disabled; all oscillators and analog blocks disabled in the PDSLEEPCFG register (PDSLEEPCFG = 0x0000 18FF).

Fig 30. Deep-sleep mode: Typical supply current I_{DD} versus temperature for different supply voltages V_{DD} (for LPC111x/103/203/303/323/333)

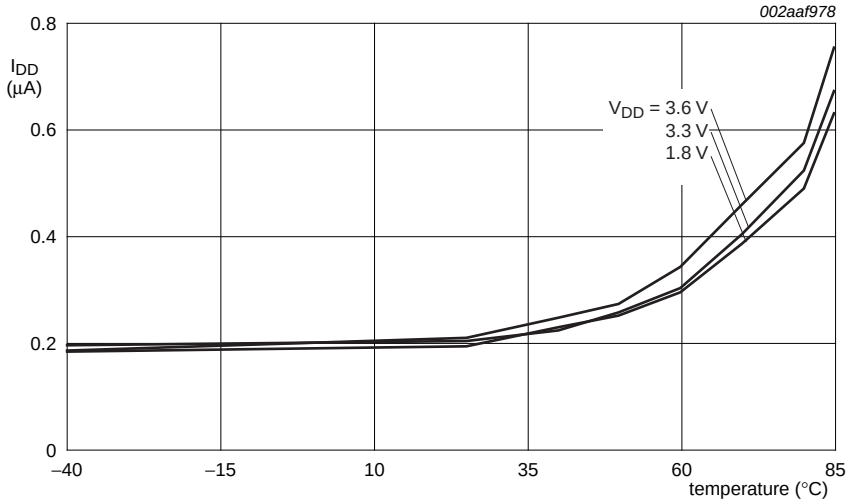

Fig 31. Deep power-down mode: Typical supply current I_{DD} versus temperature for different supply voltages V_{DD} (for LPC111x/103/203/303/323/333)

All information provided in this document is subject to legal disclaimers.

© NXP B.V. 2012. All rights reserved.

9.5 CoreMark data

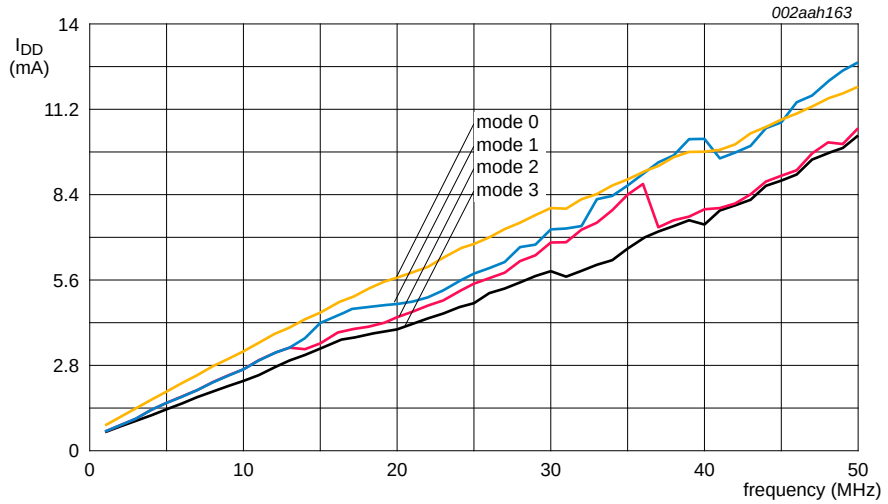

External signal generator providing 1 MHz to 20 MHz signal drives the XTALIN input; when testing 1 MHz to 19 MHz the system PLL is OFF, SYSAHBCLKDIV = 1; when testing 20 MHz to 50 MHz the system PLL is configured so that SYSAHBCLKDIV = 1.

Fig 32. CoreMark current consumption for power modes 0, 1, 2, and 3

All information provided in this document is subject to legal disclaimers.

© NXP B.V. 2012. All rights reserved.

9.6 Peripheral power consumption

The supply current per peripheral is measured as the difference in supply current between the peripheral block enabled and the peripheral block disabled in the SYSAHBCLKCFG and PDRUNCFG (for analog blocks) registers. All other blocks are disabled in both registers and no code is executed. Measured on a typical sample at T_{amb} = 25 °C. Unless noted otherwise, the system oscillator and PLL are running in both measurements.

The supply currents are shown for system clock frequencies of 12 MHz and 48 MHz.

Table 16. Power consumption for individual analog and digital blocks

Peripheral	Typical supply current in mA			Notes
	n/a	12 MHz	48 MHz	
IRC	0.27	-	-	System oscillator running; PLL off; independent of main clock frequency.
System oscillator at 12 MHz	0.22	-	-	IRC running; PLL off; independent of main clock frequency.
Watchdog oscillator at 500 kHz/2	0.004	-	-	System oscillator running; PLL off; independent of main clock frequency.
BOD	0.051	-	-	Independent of main clock frequency.
Main PLL	-	0.21	-	
ADC	-	0.08	0.29	
CLKOUT	-	0.12	0.47	Main clock divided by 4 in the CLKOUTDIV register.
CT16B0	-	0.02	0.06	
CT16B1	-	0.02	0.06	
CT32B0	-	0.02	0.07	
CT32B1	-	0.02	0.06	
GPIO	-	0.23	0.88	GPIO pins configured as outputs and set to LOW. Direction and pin state are maintained if the GPIO is disabled in the SYSAHBCLKCFG register.
IOCONFIG	-	0.03	0.10	
I2C	-	0.04	0.13	
ROM	-	0.04	0.15	
SPI0	-	0.12	0.45	
SPI1	-	0.12	0.45	
UART	-	0.22	0.82	
WDT/WWDT	-	0.02	0.06	Main clock selected as clock source for the WDT.

All information provided in this document is subject to legal disclaimers.

© NXP B.V. 2012. All rights reserved.

9.7 Electrical pin characteristics

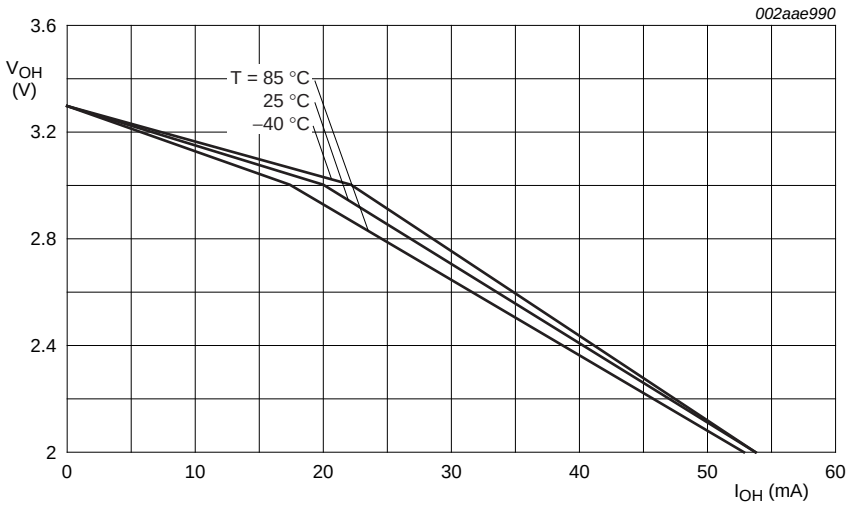

Conditions: V_{DD} = 3.3 V; on pin PIO0_7.

Fig 33. High-drive output: Typical HIGH-level output voltage V_{OH} versus HIGH-level output current I_{OH}.

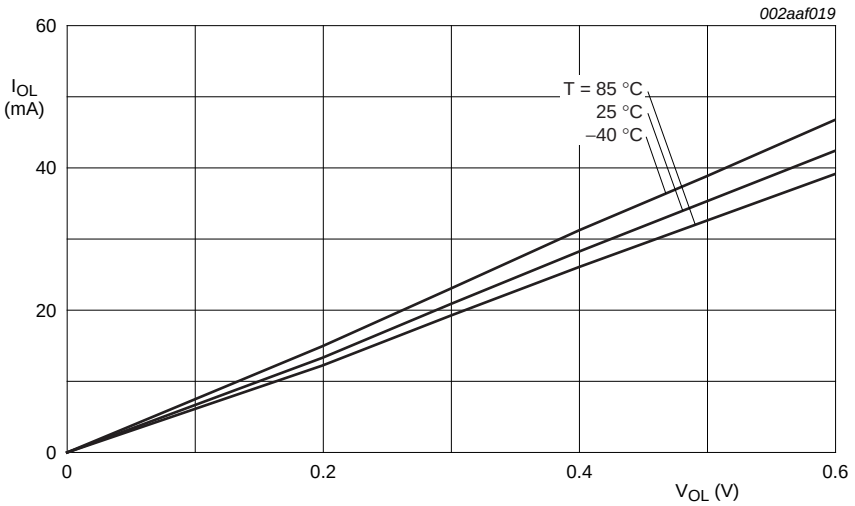

Conditions: V_{DD} = 3.3 V; on pins PIO0_4 and PIO0_5.

Fig 34. I^2C-bus pins (high current sink): Typical LOW-level output current I_{OL} versus LOW-level output voltage V_{OL}

All information provided in this document is subject to legal disclaimers.

© NXP B.V. 2012. All rights reserved.

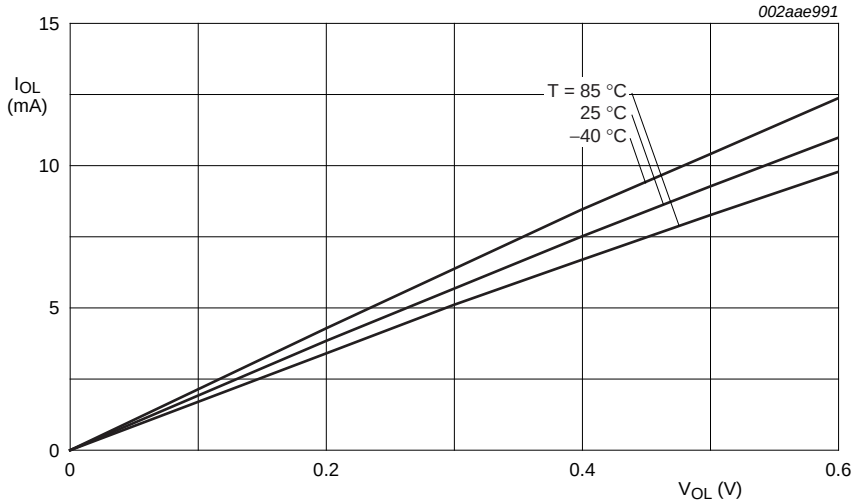

Conditions: V_{DD} = 3.3 V; standard port pins and PIO0_7.

Fig 35. Typical LOW-level output current I_{OL} versus LOW-level output voltage V_{OL}

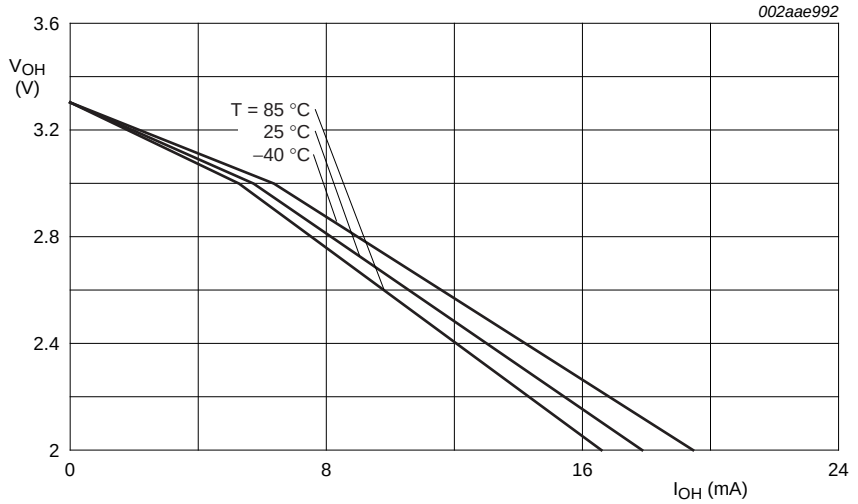

Conditions: V_{DD} = 3.3 V; standard port pins.

Fig 36. Typical HIGH-level output voltage V_{OH} versus HIGH-level output source current I_{OH}

All information provided in this document is subject to legal disclaimers.

© NXP B.V. 2012. All rights reserved.

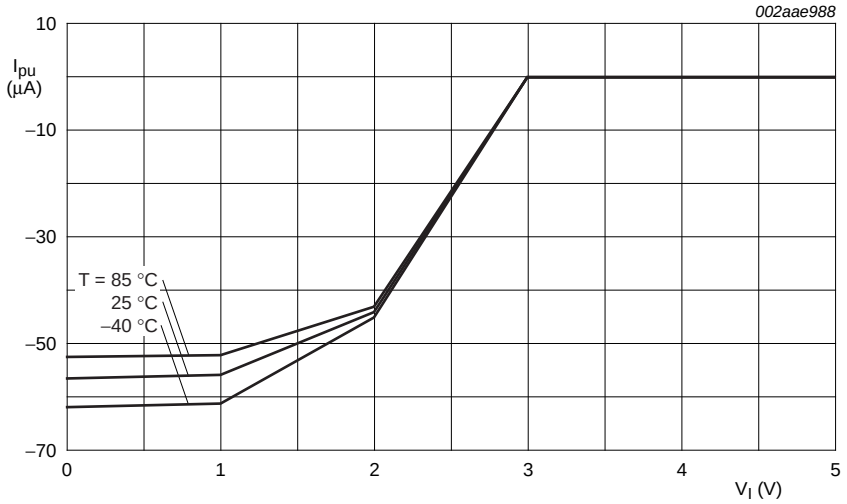

Conditions: V_{DD} = 3.3 V; standard port pins.

Fig 37. Typical pull-up current I_{pu} versus input voltage V_I

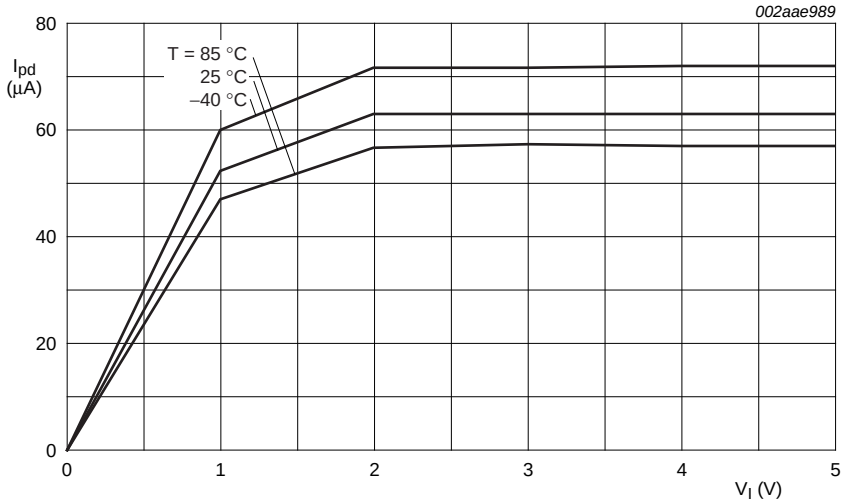

Conditions: V_{DD} = 3.3 V; standard port pins.

Fig 38. Typical pull-down current I_{pd} versus input voltage V_I

All information provided in this document is subject to legal disclaimers.

© NXP B.V. 2012. All rights reserved.

10. Dynamic characteristics

10.1 Power-up ramp conditions

Table 17. Power-up characteristics

T_{amb} = –40 °C to +85 °C.

Symbol	Parameter	Conditions		Min	Typ	Max	Unit
t_r	rise time	at t = t_1: 0 < V_I ≤ 400 mV	[1]	0	-	500	ms
t_{wait}	wait time		[1][2]	12	-	-	µs
V_I	input voltage	at t = t_1 on pin V_{DD}		0	-	400	mV

[1] See Figure 39.

[2] The wait time specifies the time the power supply must be at levels below 400 mV before ramping up.

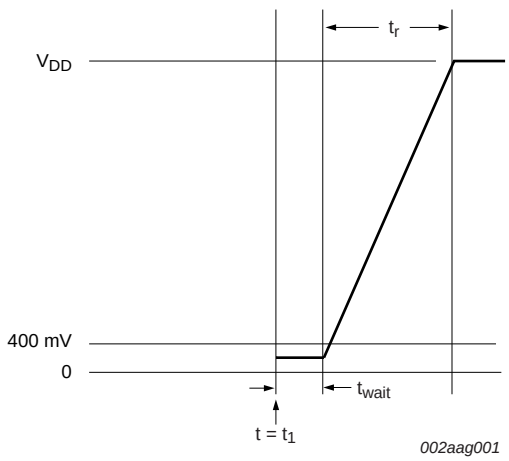

Condition: 0 < V_I ≤ 400 mV at start of power-up (t = t_1)

Fig 39. Power-up ramp

10.2 Flash memory

Table 18. Flash characteristics

T_{amb} = –40 °C to +85 °C, unless otherwise specified.

Symbol	Parameter	Conditions		Min	Typ	Max	Unit
N_{endu}	endurance		[1]	10000	100000	-	cycles
t_{ret}	retention time	powered		10	-	-	years
		unpowered		20	-	-	years
t_{er}	erase time	sector or multiple consecutive sectors		95	100	105	ms
t_{prog}	programming time		[2]	0.95	1	1.05	ms

[1] Number of program/erase cycles.

[2] Programming times are given for writing 256 bytes from RAM to the flash. Data must be written to the flash in blocks of 256 bytes.

All information provided in this document is subject to legal disclaimers.

© NXP B.V. 2012. All rights reserved.

10.3 External clock

Table 19. Dynamic characteristic: external clock

T_{amb} = −40 °C to +85 °C; V_{DD} over specified ranges.[1]

Symbol	Parameter	Conditions	Min	Typ[2]	Max	Unit
f_{osc}	oscillator frequency		1	-	25	MHz
$T_{cy(clk)}$	clock cycle time		40	-	1000	ns
t_{CHCX}	clock HIGH time		$T_{cy(clk)} \times 0.4$	-	-	ns
t_{CLCX}	clock LOW time		$T_{cy(clk)} \times 0.4$	-	-	ns
t_{CLCH}	clock rise time		-	-	5	ns
t_{CHCL}	clock fall time		-	-	5	ns

[1] Parameters are valid over operating temperature range unless otherwise specified.

[2] Typical ratings are not guaranteed. The values listed are at room temperature (25 °C), nominal supply voltages.

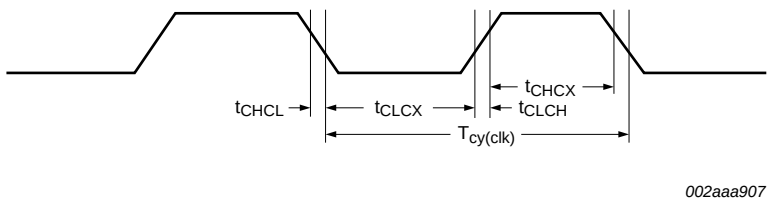

Fig 40. External clock timing (with an amplitude of at least $V_{i(RMS)}$ = 200 mV)

All information provided in this document is subject to legal disclaimers.

© NXP B.V. 2012. All rights reserved.

10.4 Internal oscillators

Table 20. Dynamic characteristic: internal oscillators

T_{amb} = –40 °C to +85 °C; 2.7 V ≤ V_{DD} ≤ 3.6 V.[1]

Symbol	Parameter	Conditions	Min	Typ[2]	Max	Unit
$f_{osc(RC)}$	internal RC oscillator frequency	-	11.88	12	12.12	MHz

[1] Parameters are valid over operating temperature range unless otherwise specified.

[2] Typical ratings are not guaranteed. The values listed are at room temperature (25 °C), nominal supply voltages.

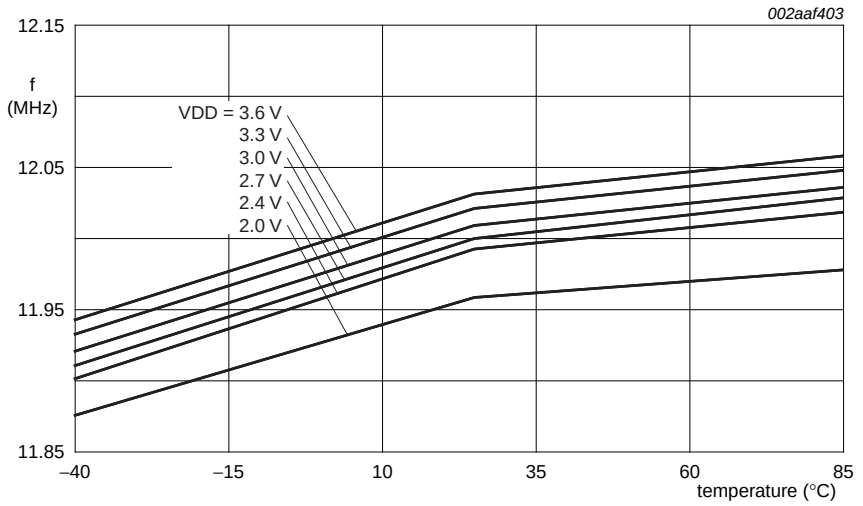

Conditions: Frequency values are typical values. 12 MHz ± 1 % accuracy is guaranteed for 2.7 V ≤ V_{DD} ≤ 3.6 V and T_{amb} = –40 °C to +85 °C. Variations between parts may cause the IRC to fall outside the 12 MHz ± 1 % accuracy specification for voltages below 2.7 V.

Fig 41. Internal RC oscillator frequency versus temperature

All information provided in this document is subject to legal disclaimers.

© NXP B.V. 2012. All rights reserved.

Table 21. Dynamic characteristics: Watchdog oscillator

Symbol	Parameter	Conditions		Min	Typ[1]	Max	Unit
$f_{osc(int)}$	internal oscillator frequency	DIVSEL = 0x1F, FREQSEL = 0x1 in the WDTOSCCTRL register;	[2][3]	-	9.4	-	kHz
		DIVSEL = 0x00, FREQSEL = 0xF in the WDTOSCCTRL register	[2][3]	-	2300	-	kHz

[1] Typical ratings are not guaranteed. The values listed are at room temperature (25 °C), nominal supply voltages.

[2] The typical frequency spread over processing and temperature (T_{amb} = –40 °C to +85 °C) is ±40 %.

[3] See the *LPC111x user manual*.

10.5 I/O pins

Table 22. Dynamic characteristic: I/O pins[1]

T_{amb} = –40 °C to +85 °C; 3.0 V ≤ V_{DD} ≤ 3.6 V.

Symbol	Parameter	Conditions	Min	Typ	Max	Unit
t_r	rise time	pin configured as output	3.0	-	5.0	ns
t_f	fall time	pin configured as output	2.5	-	5.0	ns

[1] Applies to standard port pins and $\overline{\text{RESET}}$ pin.

All information provided in this document is subject to legal disclaimers.

© NXP B.V. 2012. All rights reserved.

10.6 I²C-bus

Table 23. Dynamic characteristic: I²C-bus pins[1]
T_{amb} = −40 °C to +85 °C.[2]

Symbol	Parameter		Conditions	Min	Max	Unit
f_{SCL}	SCL clock frequency		Standard-mode	0	100	kHz
			Fast-mode	0	400	kHz
			Fast-mode Plus	0	1	MHz
t_f	fall time	[4][5][6][7]	of both SDA and SCL signals	-	300	ns
			Standard-mode			
			Fast-mode	$20 + 0.1 \times C_b$	300	ns
			Fast-mode Plus	-	120	ns
t_{LOW}	LOW period of the SCL clock		Standard-mode	4.7	-	μs
			Fast-mode	1.3	-	μs
			Fast-mode Plus	0.5	-	μs
t_{HIGH}	HIGH period of the SCL clock		Standard-mode	4.0	-	μs
			Fast-mode	0.6	-	μs
			Fast-mode Plus	0.26	-	μs
$t_{HD;DAT}$	data hold time	[3][4][8]	Standard-mode	0	-	μs
			Fast-mode	0	-	μs
			Fast-mode Plus	0	-	μs
$t_{SU;DAT}$	data set-up time	[9][10]	Standard-mode	250	-	ns
			Fast-mode	100	-	ns
			Fast-mode Plus	50	-	ns

[1] See the I²C-bus specification *UM10204* for details.

[2] Parameters are valid over operating temperature range unless otherwise specified.

[3] $t_{HD;DAT}$ is the data hold time that is measured from the falling edge of SCL; applies to data in transmission and the acknowledge.

[4] A device must internally provide a hold time of at least 300 ns for the SDA signal (with respect to the V_{IH}(min) of the SCL signal) to bridge the undefined region of the falling edge of SCL.

[5] C_b = total capacitance of one bus line in pF.

[6] The maximum t_f for the SDA and SCL bus lines is specified at 300 ns. The maximum fall time for the SDA output stage t_f is specified at 250 ns. This allows series protection resistors to be connected in between the SDA and the SCL pins and the SDA/SCL bus lines without exceeding the maximum specified t_f.

[7] In Fast-mode Plus, fall time is specified the same for both output stage and bus timing. If series resistors are used, designers should allow for this when considering bus timing.

[8] The maximum $t_{HD;DAT}$ could be 3.45 μs and 0.9 μs for Standard-mode and Fast-mode but must be less than the maximum of $t_{VD;DAT}$ or $t_{VD;ACK}$ by a transition time (see *UM10204*). This maximum must only be met if the device does not stretch the LOW period (t_{LOW}) of the SCL signal. If the clock stretches the SCL, the data must be valid by the set-up time before it releases the clock.

[9] $t_{SU;DAT}$ is the data set-up time that is measured with respect to the rising edge of SCL; applies to data in transmission and the acknowledge.

[10] A Fast-mode I²C-bus device can be used in a Standard-mode I²C-bus system but the requirement $t_{SU;DAT}$ = 250 ns must then be met. This will automatically be the case if the device does not stretch the LOW period of the SCL signal. If such a device does stretch the LOW period of the SCL signal, it must output the next data bit to the SDA line $t_{r(max)} + t_{SU;DAT}$ = 1000 + 250 = 1250 ns (according to the Standard-mode I²C-bus specification) before the SCL line is released. Also the acknowledge timing must meet this set-up time.

All information provided in this document is subject to legal disclaimers.

© NXP B.V. 2012. All rights reserved.

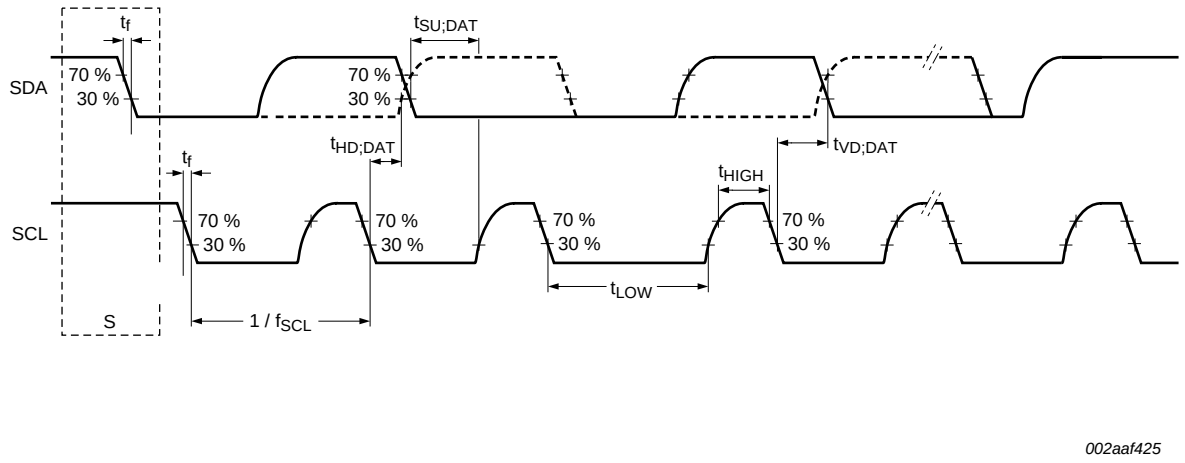

Fig 42. I²C-bus pins clock timing

10.7 SPI interfaces

Table 24. Dynamic characteristics of SPI pins in SPI mode

Symbol	Parameter	Conditions		Min	Typ	Max	Unit
SPI master (in SPI mode)							
$T_{cy(clk)}$	clock cycle time	full-duplex mode	[1]	50	-	-	ns
		when only transmitting	[1]	40			ns
t_{DS}	data set-up time	in SPI mode	[2]	15	-	-	ns
		$2.4\ V \le V_{DD} \le 3.6\ V$					
		$2.0\ V \le V_{DD} < 2.4\ V$	[2]	20			ns
		$1.8\ V \le V_{DD} < 2.0\ V$	[2]	24	-	-	ns
t_{DH}	data hold time	in SPI mode	[2]	0	-	-	ns
$t_{v(Q)}$	data output valid time	in SPI mode	[2]	-	-	10	ns
$t_{h(Q)}$	data output hold time	in SPI mode	[2]	0	-	-	ns
SPI slave (in SPI mode)							
$T_{cy(PCLK)}$	PCLK cycle time			20	-	-	ns
t_{DS}	data set-up time	in SPI mode	[3][4]	0	-	-	ns
t_{DH}	data hold time	in SPI mode	[3][4]	$3 \times T_{cy(PCLK)} + 4$	-	-	ns
$t_{v(Q)}$	data output valid time	in SPI mode	[3][4]	-	-	$3 \times T_{cy(PCLK)} + 11$	ns
$t_{h(Q)}$	data output hold time	in SPI mode	[3][4]	-	-	$2 \times T_{cy(PCLK)} + 5$	ns

[1] $T_{cy(clk)} = (SSPCLKDIV \times (1 + SCR) \times CPSDVSR) / f_{main}$. The clock cycle time derived from the SPI bit rate $T_{cy(clk)}$ is a function of the main clock frequency f_{main}, the SPI peripheral clock divider (SSPCLKDIV), the SPI SCR parameter (specified in the SSP0CR0 register), and the SPI CPSDVSR parameter (specified in the SPI clock prescale register).

[2] $T_{amb} = -40\ °C$ to $85\ °C$.

[3] $T_{cy(clk)} = 12 \times T_{cy(PCLK)}$.

[4] $T_{amb} = 25\ °C$; for normal voltage supply range: $V_{DD} = 3.3\ V$.

All information provided in this document is subject to legal disclaimers.

© NXP B.V. 2012. All rights reserved.

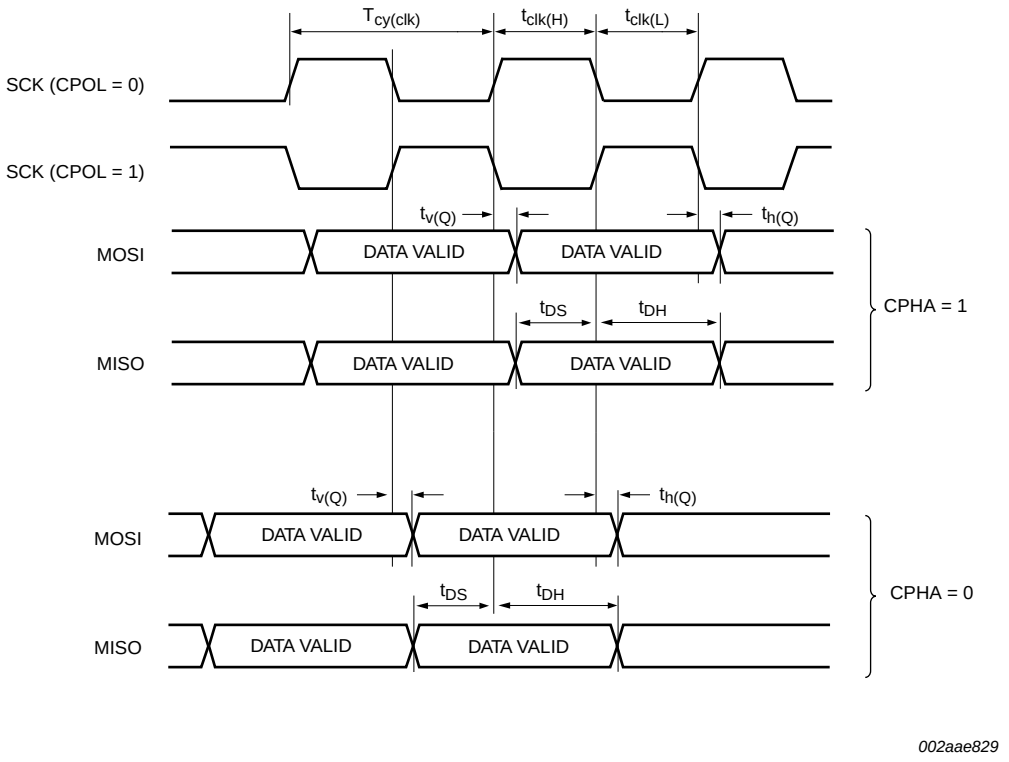

Pin names SCK, MISO, and MOSI refer to pins for both SPI peripherals, SPI0 and SPI1.

Fig 43. SPI master timing in SPI mode

All information provided in this document is subject to legal disclaimers.

© NXP B.V. 2012. All rights reserved.

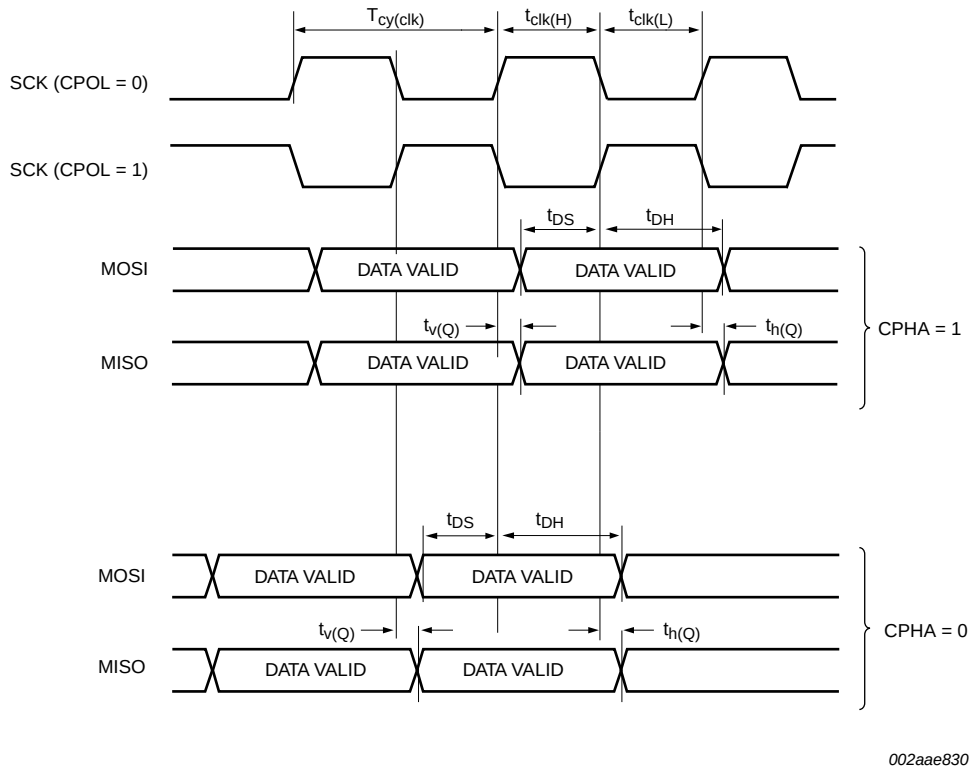

Pin names SCK, MISO, and MOSI refer to pins for both SPI peripherals, SPI0 and SPI1.

Fig 44. SPI slave timing in SPI mode

All information provided in this document is subject to legal disclaimers.

© NXP B.V. 2012. All rights reserved.

11. Application information

11.1 ADC usage notes

The following guidelines show how to increase the performance of the ADC in a noisy environment beyond the ADC specifications listed in Table 14:

- The ADC input trace must be short and as close as possible to the LPC1110/11/12/13/14/15 chip.
- The ADC input traces must be shielded from fast switching digital signals and noisy power supply lines.
- Because the ADC and the digital core share the same power supply, the power supply line must be adequately filtered.
- To improve the ADC performance in a very noisy environment, put the device in Sleep mode during the ADC conversion.

11.2 XTAL input

The input voltage to the on-chip oscillators is limited to 1.8 V. If the oscillator is driven by a clock in slave mode, it is recommended that the input be coupled through a capacitor with C_i = 100 pF. To limit the input voltage to the specified range, choose an additional capacitor to ground C_g which attenuates the input voltage by a factor $C_i/(C_i + C_g)$. In slave mode, a minimum of 200 mV (RMS) is needed.

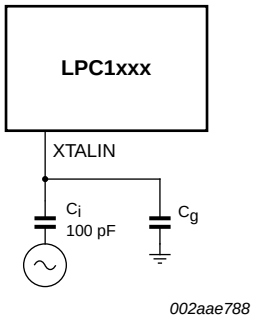

Fig 45. Slave mode operation of the on-chip oscillator

In slave mode the input clock signal should be coupled by means of a capacitor of 100 pF (Figure 45), with an amplitude between 200 mV (RMS) and 1000 mV (RMS). This corresponds to a square wave signal with a signal swing of between 280 mV and 1.4 V. The XTALOUT pin in this configuration can be left unconnected.

External components and models used in oscillation mode are shown in Figure 46 and in Table 25 and Table 26. Since the feedback resistance is integrated on chip, only a crystal and the capacitances C_{X1} and C_{X2} need to be connected externally in case of fundamental mode oscillation (the fundamental frequency is represented by L, C_L and R_S). Capacitance C_P in Figure 46 represents the parallel package capacitance and should not be larger than 7 pF. Parameters F_{OSC}, C_L, R_S and C_P are supplied by the crystal manufacturer (see Table 25).

All information provided in this document is subject to legal disclaimers.

© NXP B.V. 2012. All rights reserved.

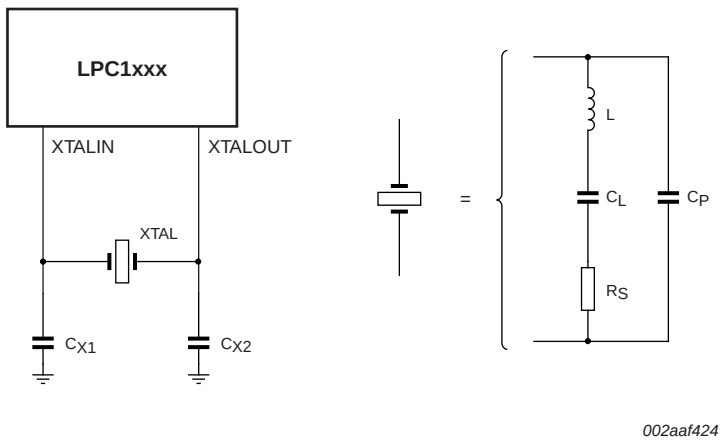

Fig 46. Oscillator modes and models: oscillation mode of operation and external crystal model used for C_{X1}/C_{X2} evaluation

Table 25. Recommended values for C_{X1}/C_{X2} in oscillation mode (crystal and external components parameters) low frequency mode

Fundamental oscillation frequency F_{OSC}	Crystal load capacitance C_L	Maximum crystal series resistance R_S	External load capacitors C_{X1}, C_{X2}
1 MHz to 5 MHz	10 pF	< 300 Ω	18 pF, 18 pF
	20 pF	< 300 Ω	39 pF, 39 pF
	30 pF	< 300 Ω	57 pF, 57 pF
5 MHz to 10 MHz	10 pF	< 300 Ω	18 pF, 18 pF
	20 pF	< 200 Ω	39 pF, 39 pF
	30 pF	< 100 Ω	57 pF, 57 pF
10 MHz to 15 MHz	10 pF	< 160 Ω	18 pF, 18 pF
	20 pF	< 60 Ω	39 pF, 39 pF
15 MHz to 20 MHz	10 pF	< 80 Ω	18 pF, 18 pF

Table 26. Recommended values for C_{X1}/C_{X2} in oscillation mode (crystal and external components parameters) high frequency mode

Fundamental oscillation frequency F_{OSC}	Crystal load capacitance C_L	Maximum crystal series resistance R_S	External load capacitors C_{X1}, C_{X2}
15 MHz to 20 MHz	10 pF	< 180 Ω	18 pF, 18 pF
	20 pF	< 100 Ω	39 pF, 39 pF
20 MHz to 25 MHz	10 pF	< 160 Ω	18 pF, 18 pF
	20 pF	< 80 Ω	39 pF, 39 pF

11.3 XTAL Printed Circuit Board (PCB) layout guidelines

The crystal should be connected on the PCB as close as possible to the oscillator input and output pins of the chip. Take care that the load capacitors C_{X1}, C_{X2}, and C_{X3} in case of third overtone crystal usage have a common ground plane. The external components must also be connected to the ground plain. Loops must be made as small as possible in

All information provided in this document is subject to legal disclaimers.

© NXP B.V. 2012. All rights reserved.

order to keep the noise coupled in via the PCB as small as possible. Also parasitics should stay as small as possible. Values of C_{X1} and C_{X2} should be chosen smaller accordingly to the increase in parasitics of the PCB layout.

11.4 Standard I/O pad configuration

Figure 47 shows the possible pin modes for standard I/O pins with analog input function:

- Digital output driver
- Digital input: Pull-up enabled/disabled
- Digital input: Pull-down enabled/disabled
- Digital input: Repeater mode enabled/disabled
- Digital output: Pseudo open-drain mode enable/disabled
- Analog input

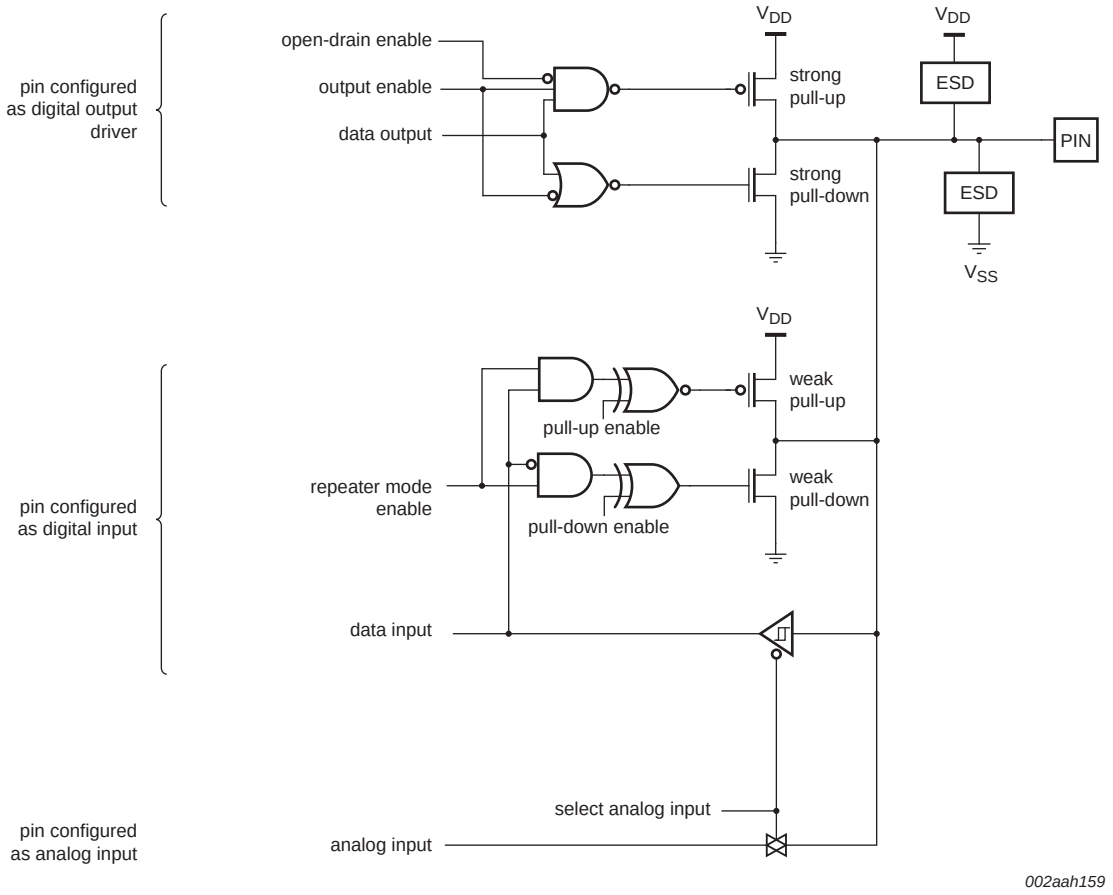

Open-drain mode available on series LPC1100L and LPC1100XL.

Fig 47. Standard I/O pad configuration

All information provided in this document is subject to legal disclaimers.

© NXP B.V. 2012. All rights reserved.

11.5 Reset pad configuration

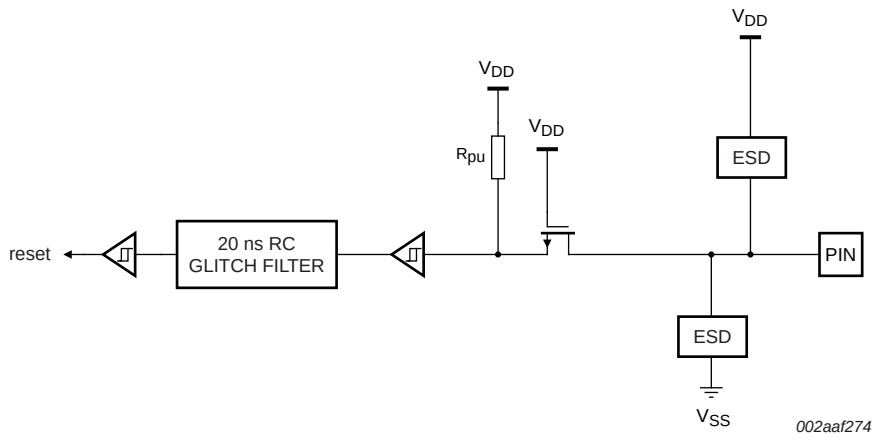

Fig 48. Reset pad configuration

11.6 ElectroMagnetic Compatibility (EMC)

Radiated emission measurements according to the IEC61967-2 standard using the TEM-cell method are shown for the LPC1114FBD48/302 in Table 27.

Table 27. ElectroMagnetic Compatibility (EMC) for part LPC1114FBD48/302 (TEM-cell method)

V_{DD} = 3.3 V; T_{amb} = 25 °C.

Parameter	Frequency band	System clock =			Unit
		12 MHz	24 MHz	48 MHz	
Input clock: IRC (12 MHz)					
maximum peak level	150 kHz to 30 MHz	–7	–5	–7	dBμV
	30 MHz to 150 MHz	–2	1	10	dBμV
	150 MHz to 1 GHz	4	8	16	dBμV
IEC level[1]	-	O	N	M	-
Input clock: crystal oscillator (12 MHz)					
maximum peak level	150 kHz to 30 MHz	–7	–7	–7	dBμV
	30 MHz to 150 MHz	–2	1	8	dBμV
	150 MHz to 1 GHz	4	7	14	dBμV
IEC level[1]	-	O	N	M	-

[1] IEC levels refer to Appendix D in the IEC61967-2 Specification.

All information provided in this document is subject to legal disclaimers.

© NXP B.V. 2012. All rights reserved.

12. Package outline

SO20: plastic small outline package; 20 leads; body width 7.5 mm **SOT163-1**

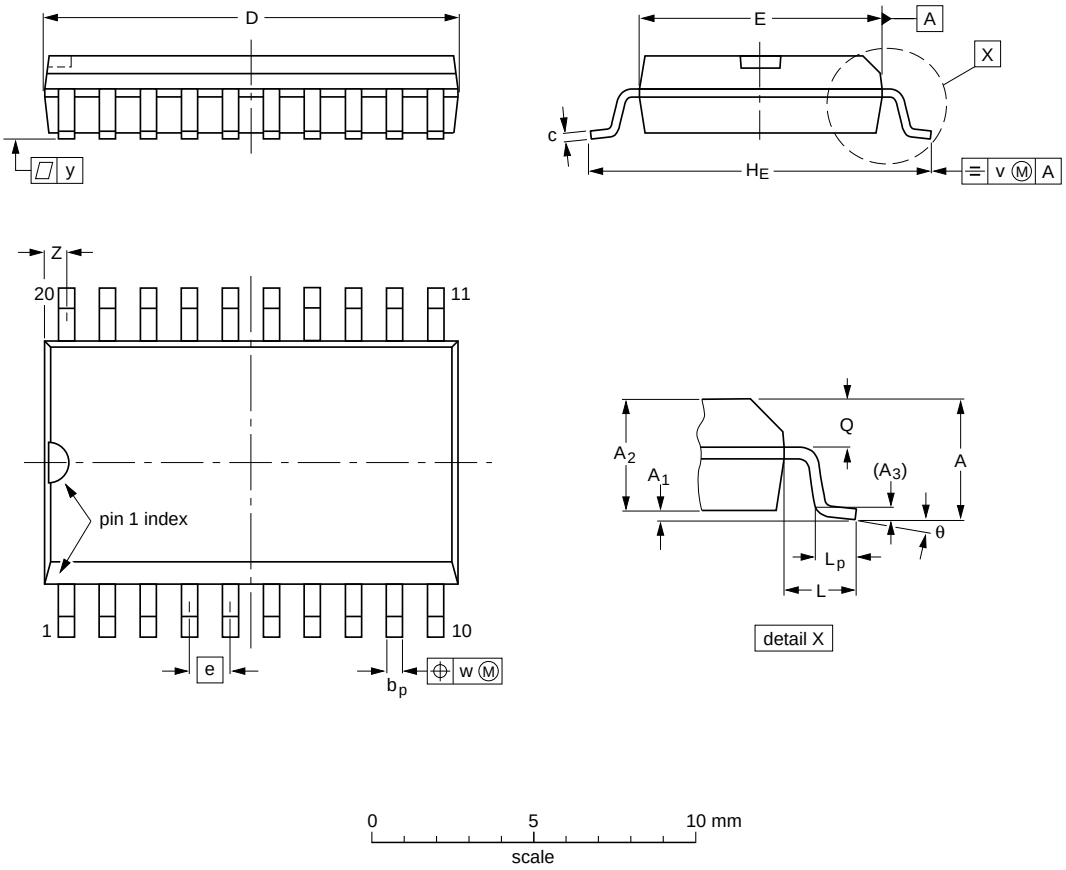

DIMENSIONS (inch dimensions are derived from the original mm dimensions)

UNIT	A max.	A_1	A_2	A_3	b_p	c	D (1)	E (1)	e	H_E	L	L_p	Q	v	w	y	Z (1)	θ
mm	2.65	0.3 0.1	2.45 2.25	0.25	0.49 0.36	0.32 0.23	13.0 12.6	7.6 7.4	1.27	10.65 10.00	1.4	1.1 0.4	1.1 1.0	0.25	0.25	0.1	0.9 0.4	8° 0°
inches	0.1	0.012 0.004	0.096 0.089	0.01	0.019 0.014	0.013 0.009	0.51 0.49	0.30 0.29	0.05	0.419 0.394	0.055	0.043 0.016	0.043 0.039	0.01	0.01	0.004	0.035 0.016	

Note

1. Plastic or metal protrusions of 0.15 mm (0.006 inch) maximum per side are not included.

OUTLINE VERSION	REFERENCES				EUROPEAN PROJECTION	ISSUE DATE
	IEC	JEDEC	JEITA			
SOT163-1	075E04	MS-013				~~99-12-27~~ 03-02-19

Fig 49. Package outline SOT163-1 (SO20)

All information provided in this document is subject to legal disclaimers.

© NXP B.V. 2012. All rights reserved.

TSSOP20: plastic thin shrink small outline package; 20 leads; body width 4.4 mm **SOT360-1**

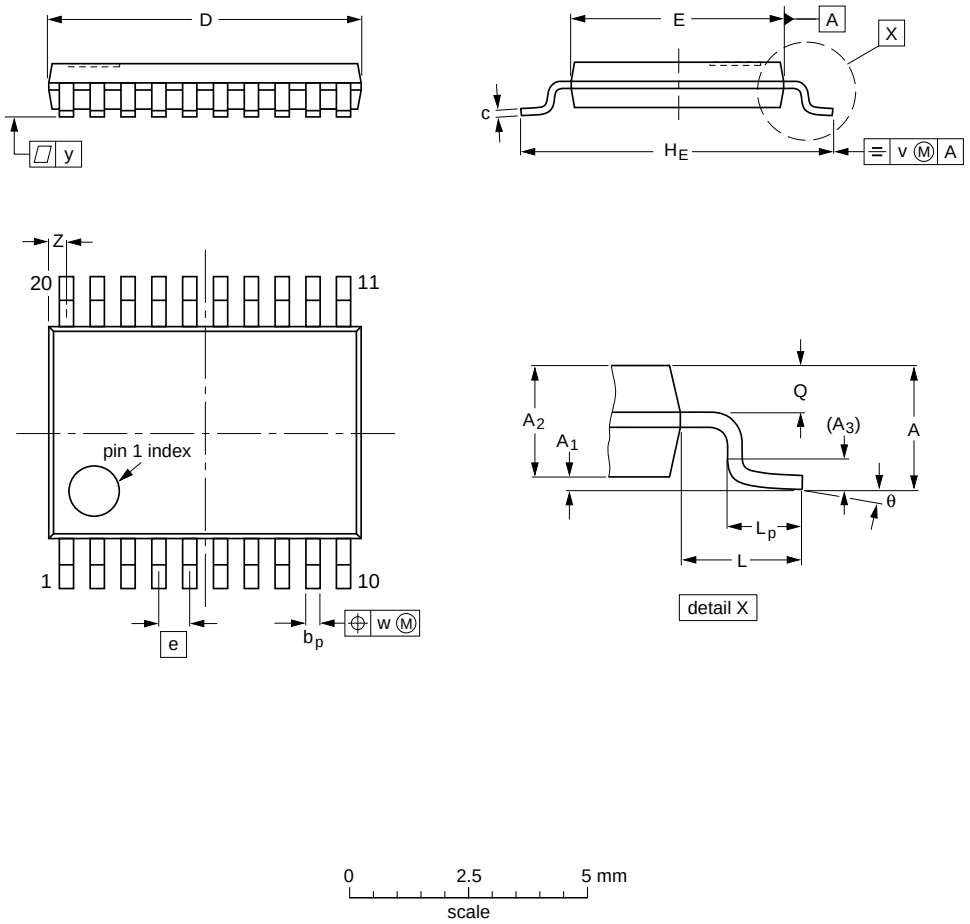

DIMENSIONS (mm are the original dimensions)

UNIT	A max.	A_1	A_2	A_3	b_p	c	D (1)	E (2)	e	H_E	L	L_p	Q	v	w	y	Z (1)	θ
mm	1.1	0.15 0.05	0.95 0.80	0.25	0.30 0.19	0.2 0.1	6.6 6.4	4.5 4.3	0.65	6.6 6.2	1	0.75 0.50	0.4 0.3	0.2	0.13	0.1	0.5 0.2	8° 0°

Notes

1. Plastic or metal protrusions of 0.15 mm maximum per side are not included.
2. Plastic interlead protrusions of 0.25 mm maximum per side are not included.

OUTLINE VERSION	REFERENCES				EUROPEAN PROJECTION	ISSUE DATE
	IEC	JEDEC	JEITA			
SOT360-1		MO-153				~~99-12-27~~ 03-02-19

Fig 50. Package outline SOT360-1 (TSSOP20)

All information provided in this document is subject to legal disclaimers.

© NXP B.V. 2012. All rights reserved.

TSSOP28: plastic thin shrink small outline package; 28 leads; body width 4.4 mm **SOT361-1**

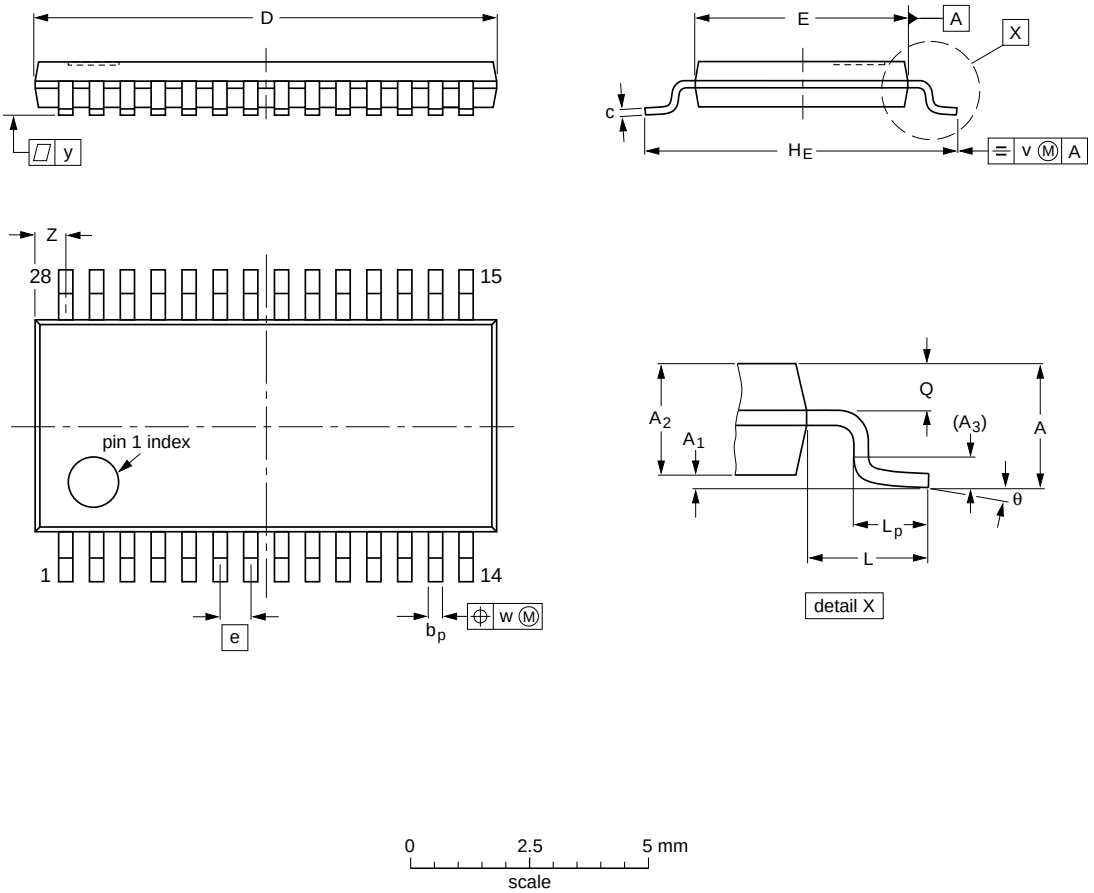

DIMENSIONS (mm are the original dimensions)

UNIT	A max.	A_1	A_2	A_3	b_p	c	D (1)	E (2)	e	H_E	L	L_p	Q	v	w	y	Z (1)	θ
mm	1.1	0.15 0.05	0.95 0.80	0.25	0.30 0.19	0.2 0.1	9.8 9.6	4.5 4.3	0.65	6.6 6.2	1	0.75 0.50	0.4 0.3	0.2	0.13	0.1	0.8 0.5	8° 0°

Notes

1. Plastic or metal protrusions of 0.15 mm maximum per side are not included.
2. Plastic interlead protrusions of 0.25 mm maximum per side are not included.

OUTLINE VERSION	REFERENCES				EUROPEAN PROJECTION	ISSUE DATE
	IEC	JEDEC	JEITA			
SOT361-1		MO-153				~~99-12-27~~ 03-02-19

Fig 51. Package outline SOT361-1 (TSSOP28)

All information provided in this document is subject to legal disclaimers.

© NXP B.V. 2012. All rights reserved.

DIP28: plastic dual in-line package; 28 leads (600 mil) **SOT117-1**

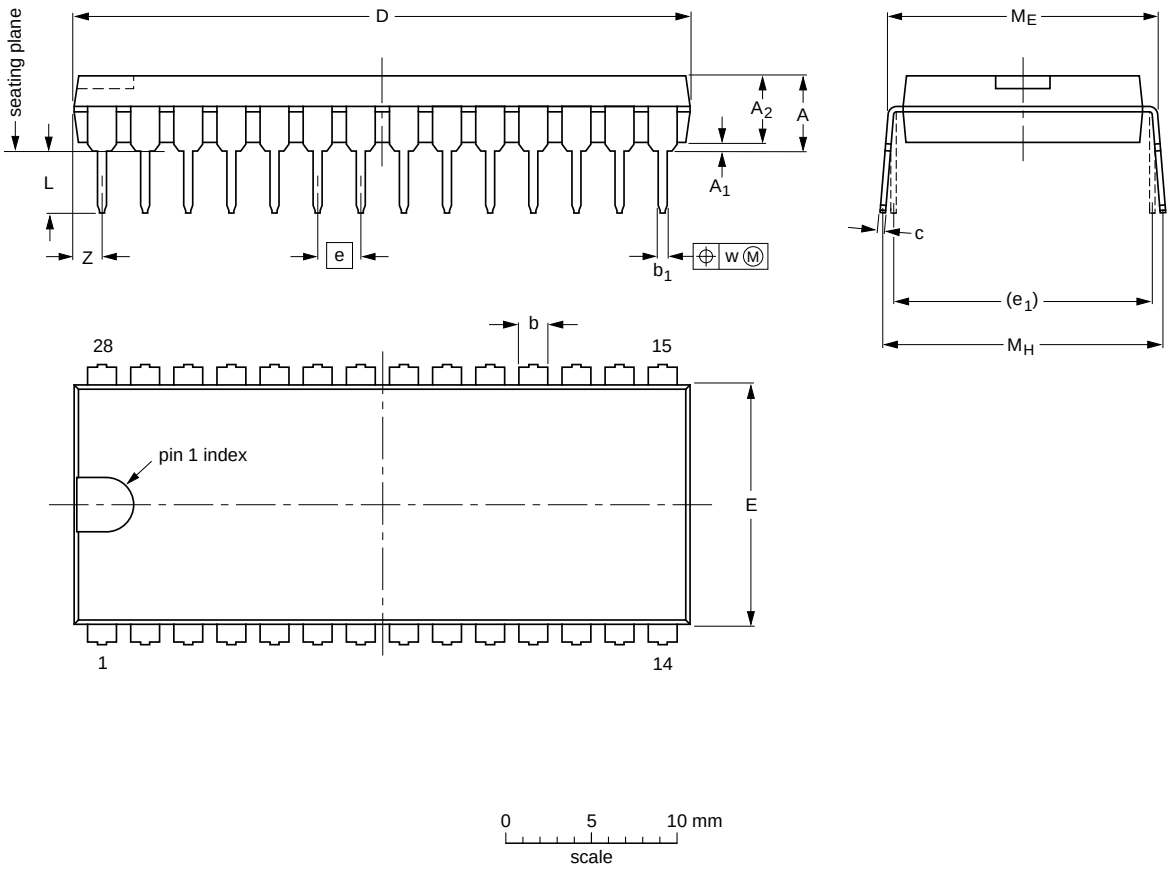

DIMENSIONS (mm dimensions are derived from the original inch dimensions)

UNIT	A max.	A_1 min.	A_2 max.	b	b_1	c	D (1)	E (1)	e	e_1	L	M_E	M_H	w	Z (1) max.
mm	5.1	0.51	4	1.7 1.3	0.53 0.38	0.32 0.23	36 35	14.1 13.7	2.54	15.24	3.9 3.4	15.80 15.24	17.15 15.90	0.25	1.7
inches	0.2	0.02	0.16	0.066 0.051	0.020 0.014	0.013 0.009	1.41 1.34	0.56 0.54	0.1	0.6	0.15 0.13	0.62 0.60	0.68 0.63	0.01	0.067

Note

1. Plastic or metal protrusions of 0.25 mm (0.01 inch) maximum per side are not included.

OUTLINE VERSION	REFERENCES				EUROPEAN PROJECTION	ISSUE DATE
	IEC	JEDEC	JEITA			
SOT117-1	051G05	MO-015	SC-510-28			~~99-12-27~~ 03-02-13

Fig 52. Package outline SOT117-1 (DIP28)

All information provided in this document is subject to legal disclaimers.

© NXP B.V. 2012. All rights reserved.

HVQFN33: plastic thermal enhanced very thin quad flat package; no leads; 32 terminals; body 5 x 5 x 0.85 mm

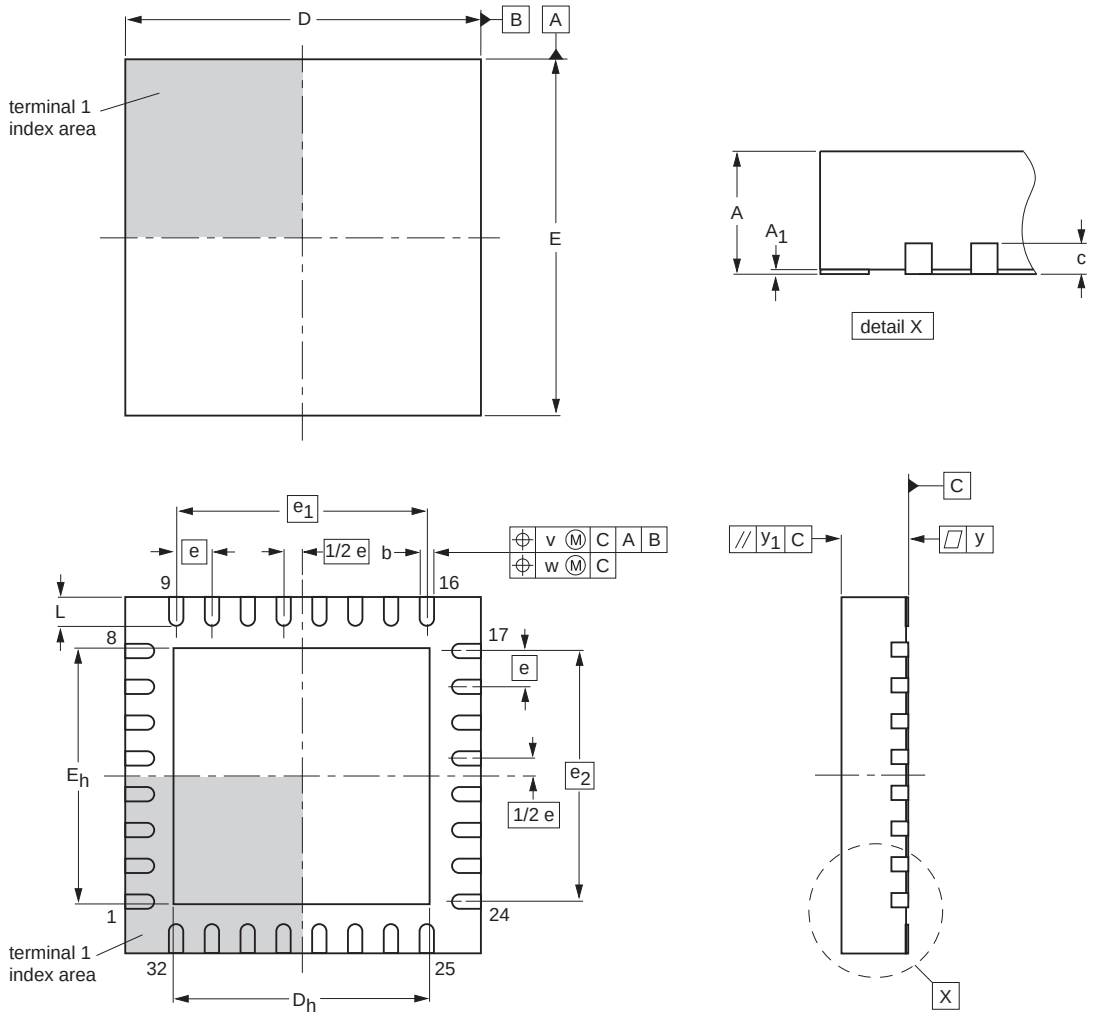

Dimensions (mm are the original dimensions)

Unit(1)		A(1)	A_1	b	c	D(1)	D_h	E(1)	E_h	e	e_1	e_2	L	v	w	y	y_1
mm	max		0.05	0.30		5.1	3.75	5.1	3.75				0.5				
	nom	0.85			0.2					0.5	3.5	3.5		0.1	0.05	0.05	0.1
	min		0.00	0.18		4.9	3.45	4.9	3.45				0.3				

Note

1. Plastic or metal protrusions of 0.075 mm maximum per side are not included.

hvqfn33f_po

Outline version	References				European projection	Issue date
	IEC	JEDEC	JEITA			
MO-220						~~11-10-11~~ 11-10-17

Fig 53. Package outline (HVQFN33 5x5)

All information provided in this document is subject to legal disclaimers.

© NXP B.V. 2012. All rights reserved.

HVQFN33: plastic thermal enhanced very thin quad flat package; no leads; 33 terminals; body 7 x 7 x 0.85 mm

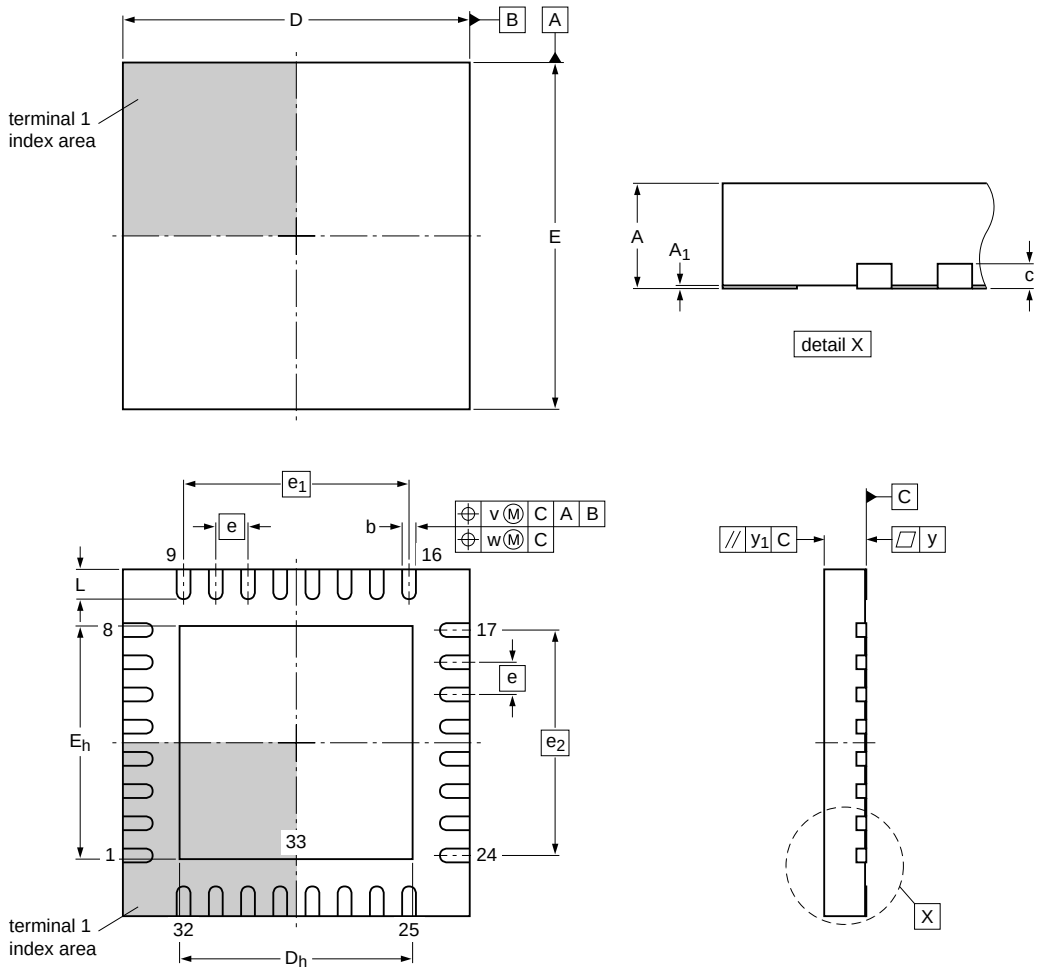

0 2.5 5 mm
scale

Dimensions

Unit		A(1)	A1	b	c	D(1)	Dh	E(1)	Eh	e	e1	e2	L	v	w	y	y1
mm	max	1.00	0.05	0.35		7.1	4.85	7.1	4.85				0.75				
	nom	0.85	0.02	0.28	0.2	7.0	4.70	7.0	4.70	0.65	4.55	4.55	0.60	0.1	0.05	0.08	0.1
	min	0.80	0.00	0.23		6.9	4.55	6.9	4.55				0.45				

Note
1. Plastic or metal protrusions of 0.075 mm maximum per side are not included.

hvqfn33_po

Outline version	References				European projection	Issue date
	IEC	JEDEC	JEITA			
		- - -				~~09-03-17~~ 09-03-23

Fig 54. Package outline (HVQFN33 7x7)

All information provided in this document is subject to legal disclaimers.

© NXP B.V. 2012. All rights reserved.

LQFP48: plastic low profile quad flat package; 48 leads; body 7 x 7 x 1.4 mm **SOT313-2**

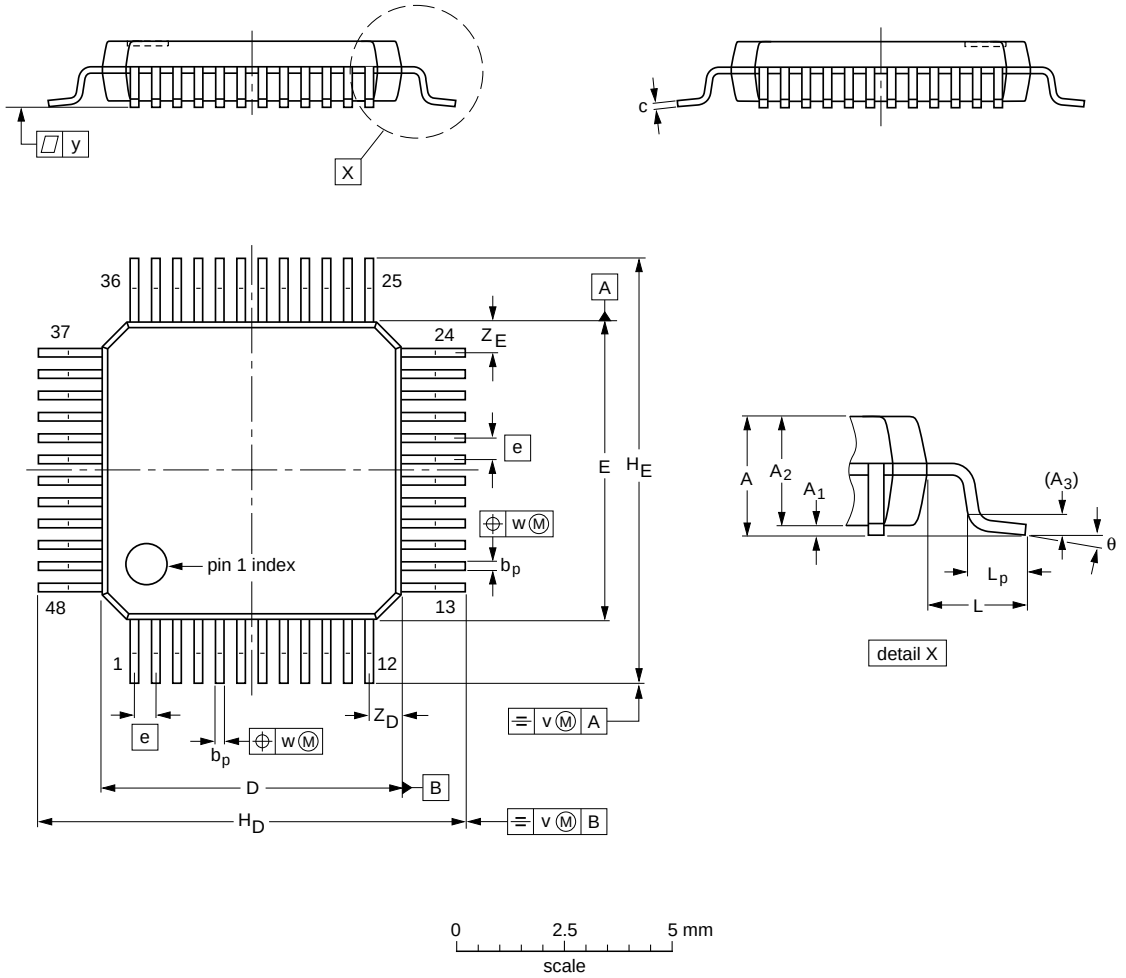

DIMENSIONS (mm are the original dimensions)

UNIT	A max.	A_1	A_2	A_3	b_p	c	D(1)	E(1)	e	H_D	H_E	L	L_p	v	w	y	Z_D(1)	Z_E(1)	θ
mm	1.6	0.20 0.05	1.45 1.35	0.25	0.27 0.17	0.18 0.12	7.1 6.9	7.1 6.9	0.5	9.15 8.85	9.15 8.85	1	0.75 0.45	0.2	0.12	0.1	0.95 0.55	0.95 0.55	7° 0°

Note

1. Plastic or metal protrusions of 0.25 mm maximum per side are not included.

OUTLINE VERSION	REFERENCES				EUROPEAN PROJECTION	ISSUE DATE
	IEC	JEDEC	JEITA			
SOT313-2	136E05	MS-026				~~00-01-19~~ 03-02-25

Fig 55. Package outline SOT313-2 (LQFP48)

All information provided in this document is subject to legal disclaimers.

© NXP B.V. 2012. All rights reserved.

HVQFN24: plastic thermal enhanced very thin quad flat package; no leads; 24 terminals; body 4 x 4 x 0.85 mm **SOT616-3**

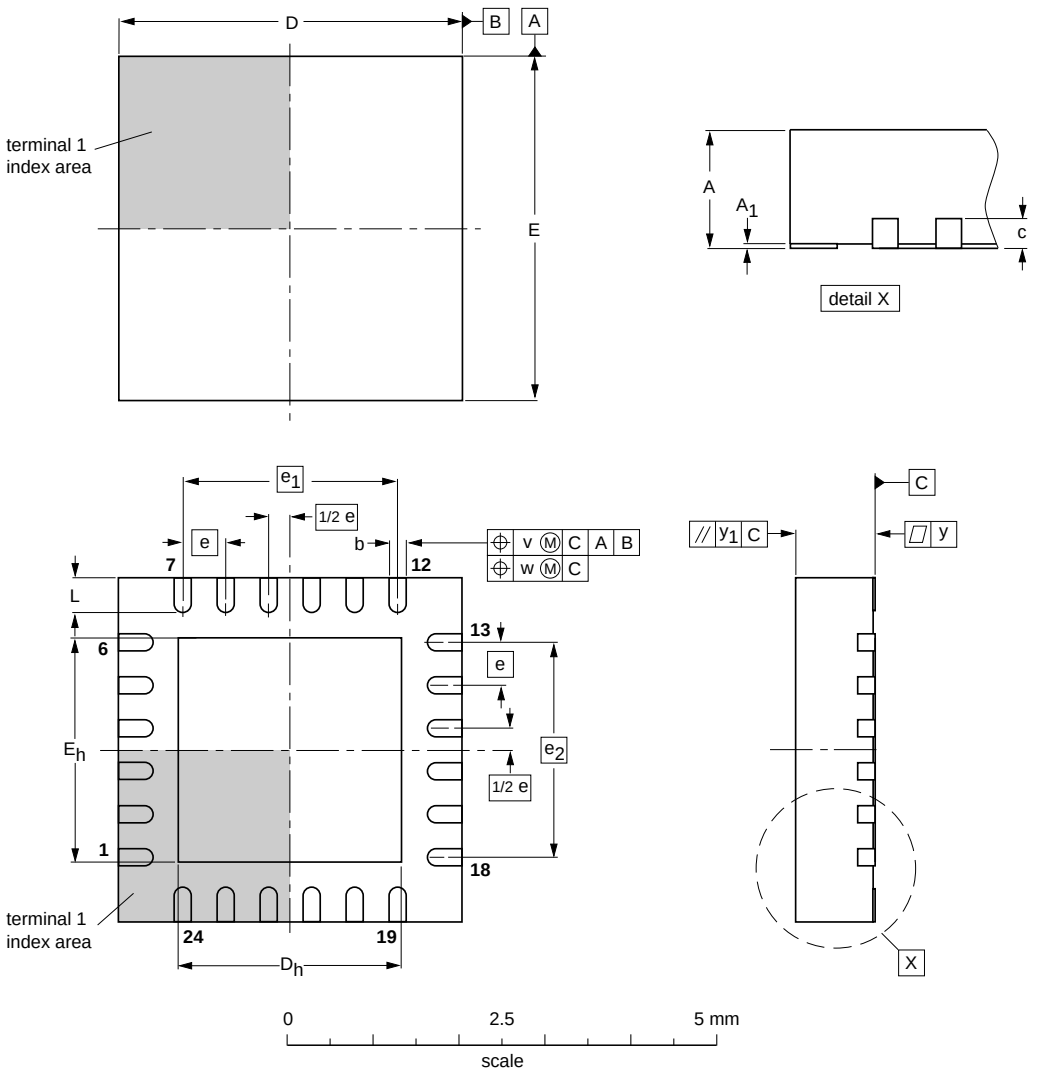

DIMENSIONS (mm are the original dimensions)

UNIT	A(1) max.	A_1	b	c	D(1)	D_h	E(1)	E_h	e	e_1	e_2	L	v	w	y	y_1
mm	1	0.05 0.00	0.30 0.18	0.2	4.1 3.9	2.75 2.45	4.1 3.9	2.75 2.45	0.5	2.5	2.5	0.5 0.3	0.1	0.05	0.05	0.1

Note

1. Plastic or metal protrusions of 0.075 mm maximum per side are not included.

OUTLINE VERSION	REFERENCES				EUROPEAN PROJECTION	ISSUE DATE
	IEC	JEDEC	JEITA			
SOT616-3	- - -	MO-220	- - -			~~04-11-19~~ 05-03-10

Fig 56. Package outline SOT616-3 (HVQFN24)

All information provided in this document is subject to legal disclaimers.

© NXP B.V. 2012. All rights reserved.

13. Soldering

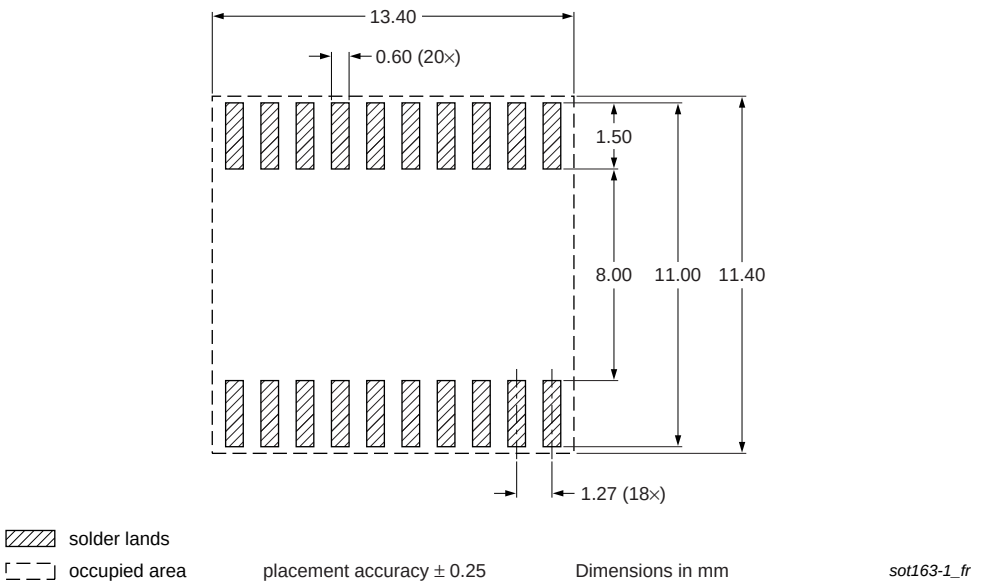

Fig 57. Reflow soldering of the SO20 package

All information provided in this document is subject to legal disclaimers.

© NXP B.V. 2012. All rights reserved.

Footprint information for reflow soldering of TSSOP20 package **SOT360-1**

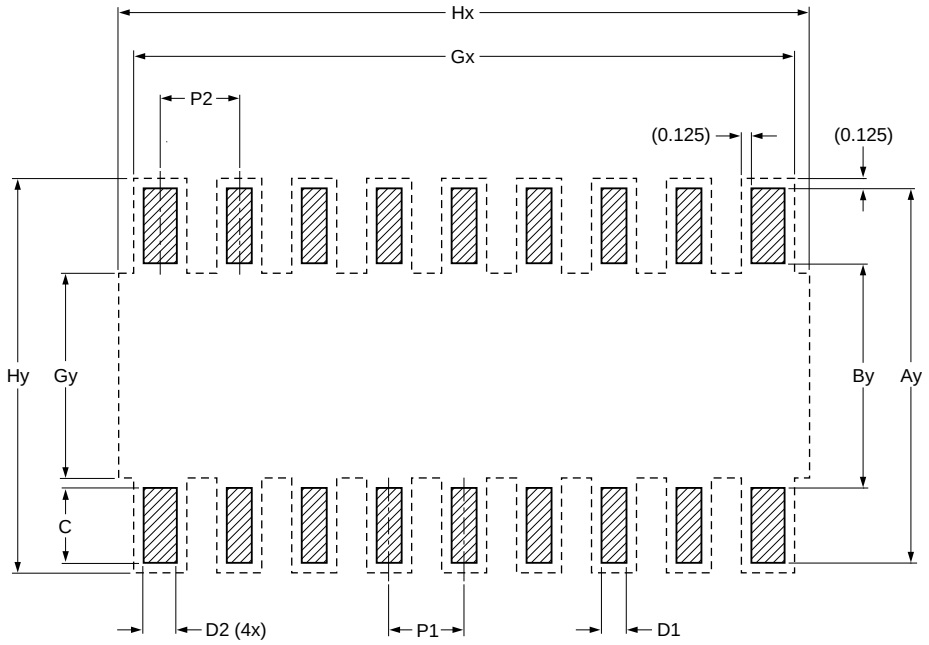

Generic footprint pattern

Refer to the package outline drawing for actual layout

solder land

occupied area

DIMENSIONS in mm

P1	P2	Ay	By	C	D1	D2	Gx	Gy	Hx	Hy
0.650	0.750	7.200	4.500	1.350	0.400	0.600	6.900	5.300	7.300	7.450

sot360-1_fr

Fig 58. Reflow soldering of the TSSOP20 package

All information provided in this document is subject to legal disclaimers.

© NXP B.V. 2012. All rights reserved.

Footprint information for reflow soldering of TSSOP28 package **SOT361-1**

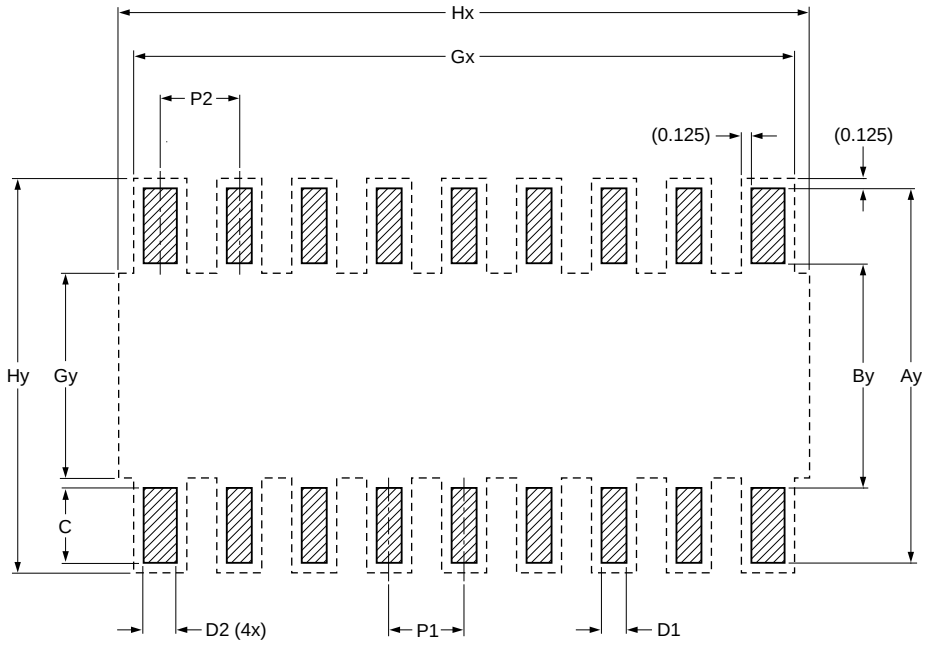

Generic footprint pattern

Refer to the package outline drawing for actual layout

solder land

occupied area

DIMENSIONS in mm

P1	P2	Ay	By	C	D1	D2	Gx	Gy	Hx	Hy
0.650	0.750	7.200	4.500	1.350	0.400	0.600	9.500	5.300	11.800	7.450

sot361-1_fr

Fig 59. Reflow soldering of the TSSOP28 package

All information provided in this document is subject to legal disclaimers.

© NXP B.V. 2012. All rights reserved.

Footprint information for reflow soldering of HVQFN24 package **SOT616-3**

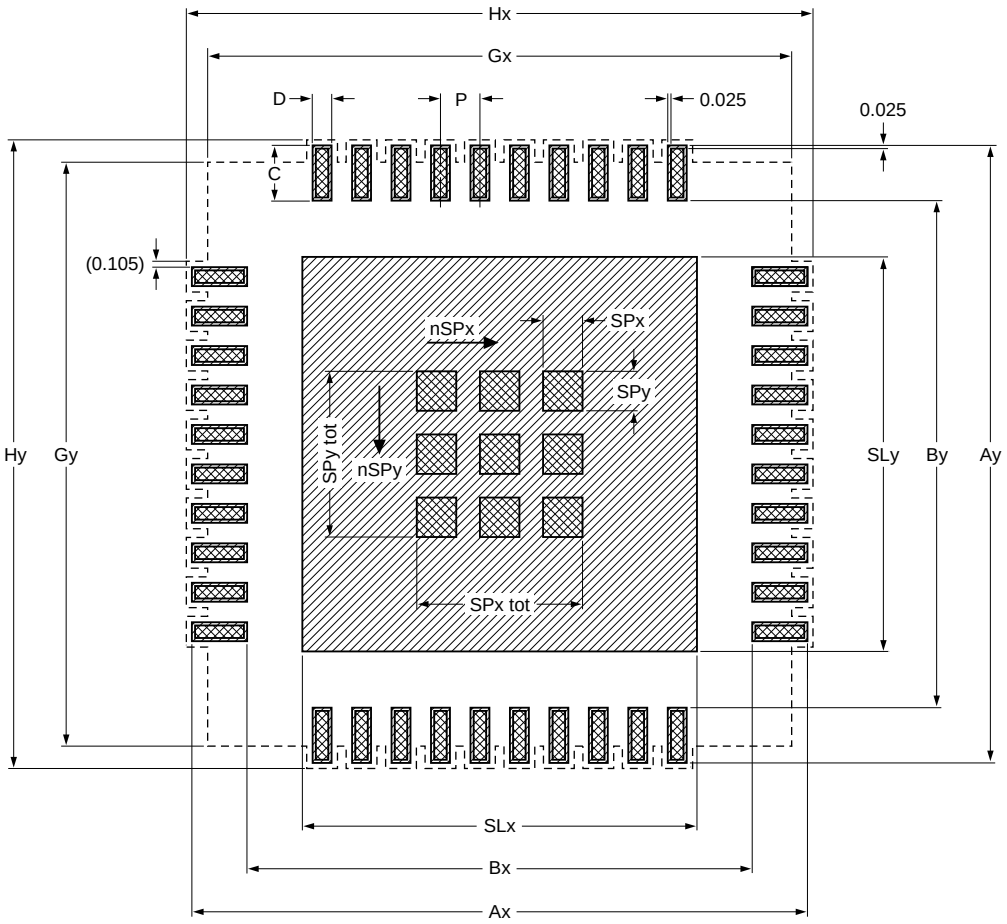

Generic footprint pattern

Refer to the package outline drawing for actual layout

solder land

solder paste deposit

solder land plus solder paste

occupied area

nSPx	nSPy
2	2

Dimensions in mm

P	Ax	Ay	Bx	By	C	D	SLx	SLy	SPx tot	SPy tot	SPx	SPy	Gx	Gy	Hx	Hy
0.500	5.000	5.000	3.200	3.200	0.900	0.240	2.500	2.500	1.500	1.500	0.550	0.550	4.300	4.300	5.250	5.250

Issue date ~~07-05-07~~ 09-06-15 *sot616-3_fr*

Fig 60. Reflow soldering of the HVQFN24 package

All information provided in this document is subject to legal disclaimers.

© NXP B.V. 2012. All rights reserved.

Footprint information for reflow soldering of HVQFN33 package

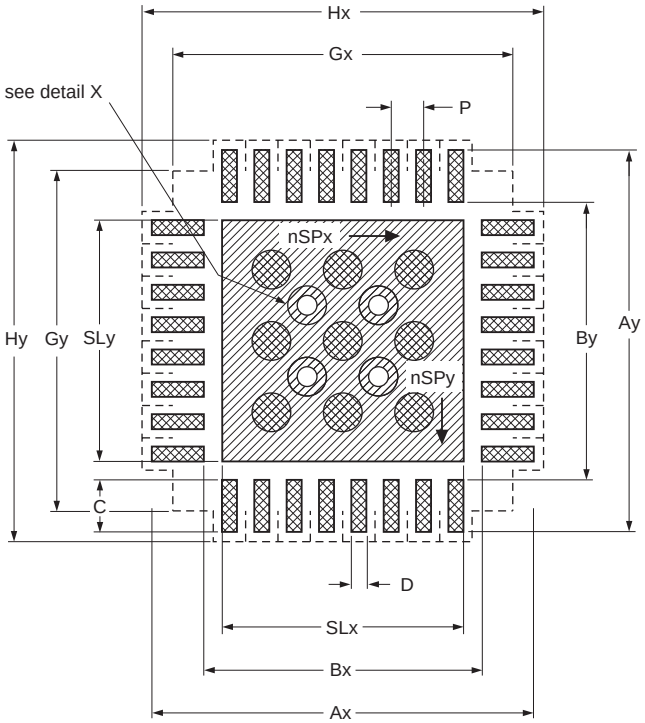

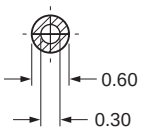

detail X

solder land

solder paste

occupied area

Dimensions in mm

P	Ax	Ay	Bx	By	C	D	Gx	Gy	Hx	Hy	SLx	SLy	nSPx	nSPy
0.5	5.95	5.95	4.25	4.25	0.85	0.27	5.25	5.25	6.2	6.2	3.75	3.75	3	3

Issue date ~~11-11-15~~ 11-11-20

002aag766

Fig 61. Reflow soldering of the HVQFN33 package (5x5)

All information provided in this document is subject to legal disclaimers.

© NXP B.V. 2012. All rights reserved.

Footprint information for reflow soldering of HVQFN33 package

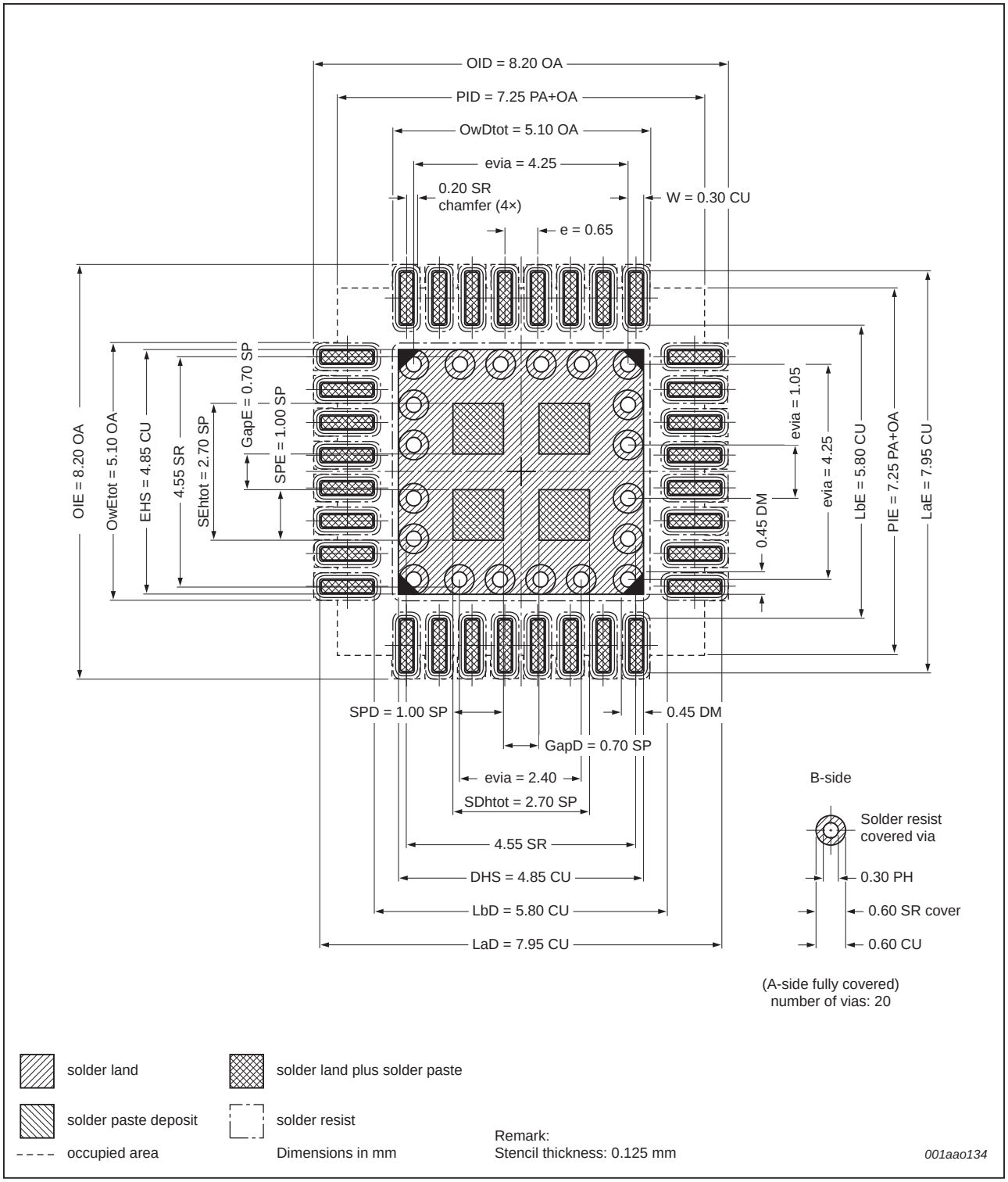

Fig 62. Reflow soldering of the HVQFN33 package (7x7)

All information provided in this document is subject to legal disclaimers.

© NXP B.V. 2012. All rights reserved.

Footprint information for reflow soldering of LQFP48 package **SOT313-2**

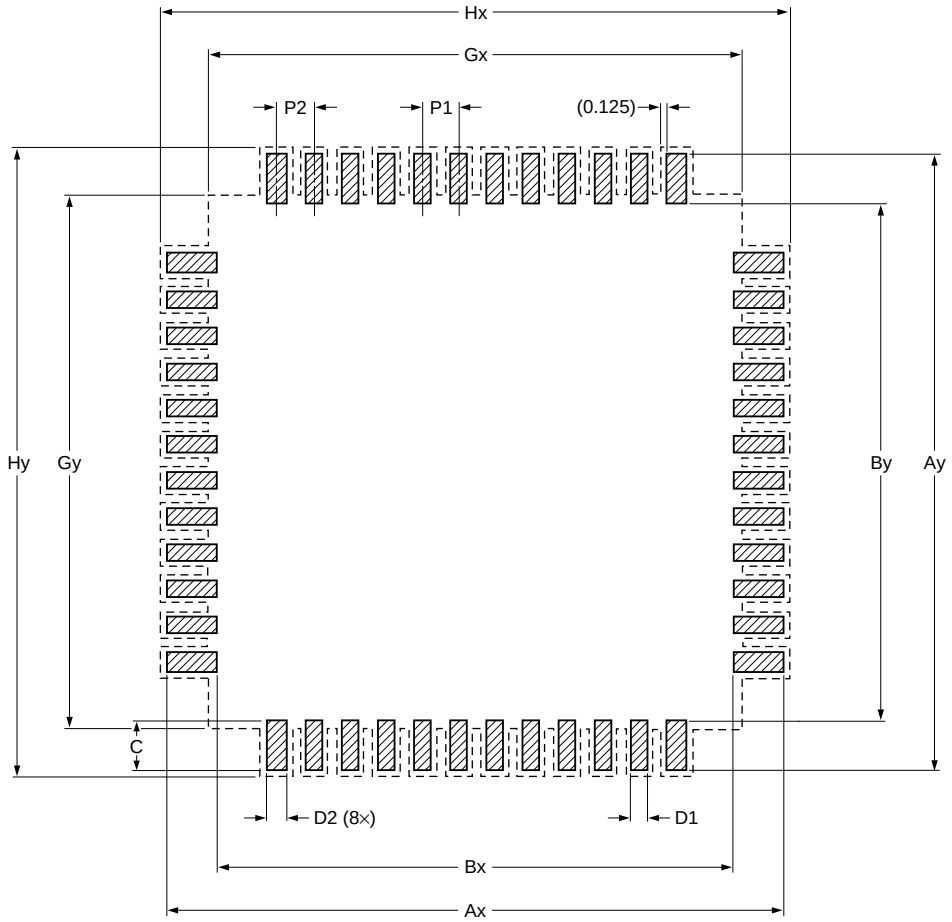

Generic footprint pattern

Refer to the package outline drawing for actual layout

solder land

occupied area

DIMENSIONS in mm

P1	P2	Ax	Ay	Bx	By	C	D1	D2	Gx	Gy	Hx	Hy
0.500	0.560	10.350	10.350	7.350	7.350	1.500	0.280	0.500	7.500	7.500	10.650	10.650

sot313-2_fr

Fig 63. Reflow soldering of the LQFP48 package

All information provided in this document is subject to legal disclaimers.

© NXP B.V. 2012. All rights reserved.

14. Abbreviations

Table 28. Abbreviations

Acronym	Description
ADC	Analog-to-Digital Converter
AHB	Advanced High-performance Bus
APB	Advanced Peripheral Bus
BOD	BrownOut Detection
GPIO	General Purpose Input/Output
PLL	Phase-Locked Loop
RC	Resistor-Capacitor
SPI	Serial Peripheral Interface
SSI	Serial Synchronous Interface
SSP	Synchronous Serial Port
TEM	Transverse ElectroMagnetic
UART	Universal Asynchronous Receiver/Transmitter

All information provided in this document is subject to legal disclaimers.

© NXP B.V. 2012. All rights reserved.

15. Revision history

Table 29. Revision history

Document ID	Release date	Data sheet status	Change notice	Supersedes
LPC111X v.7.5	20121002	Product data sheet	-	LPC111X v.7.4
Modifications:	BOD level 0 for reset added in Table 15.			
LPC111X v.7.4	20120730	Product data sheet	-	LPC111X v.7.3
Modifications:	• Function SSEL1 added to pin PIO2_0 in Figure 6 “LPC1100XL series pin configuration HVQFN33” and Table 11 “LPC1100XL series: LPC1111/12/13/14 pin description table (HVQFN33 package)”. • BOD level 0 for reset and interrupt removed.			
LPC111X v.7.3	20120706	Product data sheet	-	LPC111X v.7.2
Modifications:	• Corrected pinout for part LPC1112FHN24/202. Pin XTALOUT replaced by V_{DD}. See Table 6 and Figure 10.			
LPC111X v.7.2	20120604	Product data sheet	-	LPC111X v.7.1
Modifications:	• For parameters I_{OL}, V_{OL}, I_{OH}, V_{OH}, changed conditions to 1.8 V ≤ V_{DD} < 2.5 V and 2.5 V ≤ V_{DD} ≤ 3.6 V in Table 13). • Capture-clear feature added to general-purpose counter/timers (see Section 7.12; LPC1100XL series only). • Figure 47 updated for parts with configurable open-drain mode. • Added Section 9.5 “CoreMark data” • Added LPC1100L series part (LPC1112FHN24/202). • WDOSc frequency range corrected.			
LPC111X v.7.1	20120401	Product data sheet	-	LPC111X v.7
Modifications:	• Added HVQFN33 (5x5) reflow soldering information.			
LPC111X v.7	20120301	Product data sheet	-	LPC1110_11_12_13_14 v.6
Modifications:	• LPC1100XL series parts added (LPC1111FHN33/103, LPC1111FHN33/203, LPC1112FHN33/103, LPC1112FHN33/203, LPC1112FHI33/203, LPC1113FBD48/303, LPC1113FHN33/203, LPC1113FHN33/303, LPC1114FBD48/303, LPC1114FHN33/203, LPC1114FHN33/303, LPC1114FHI33/303, LPC1114FBD48/323, LPC1114FBD48/333, LPC1114FHN33/333, LPC1115FBD48/303).			
LPC1110_11_12_13_14 v.6	20111102	Product data sheet	-	LPC1111_12_13_14 v.5
Modifications:	• Parts LPC1112FHI33/202 and LPC1114FHI33/302 added. • Parts LPC1112FDH28/102, LPC1114FDH28/102, LPC1114FN28/102, LPC1112FDH20/102, LPC1110FD20, LPC1111FDH20/002, LPC1112FD20/102 added.			
LPC1111_12_13_14 v.5	20110622	Product data sheet	-	LPC1111_12_13_14 v.4
Modifications:	• ADC sampling frequency corrected in Table 7 (Table note 7). • Pull-up level specified in Table 3 to Table 4 and Section 7.7.1. • Parameter $T_{cy(clk)}$ corrected on Table 17. • WWDT for parts LPC111x/102/202/302 added in Section 2 and Section 7.15. • Programmable open-drain mode for parts LPC111x/102/202/302 added in Section 2 and Section 7.12. • Condition for parameter T_{stg} in Table 5 updated. • Table note 4 of Table 5 updated. • Section 13 added. • Removed PLCC44 package information.			
LPC1111_12_13_14 v.4	20110210	Product data sheet	-	LPC1111_12_13_14 v.3

All information provided in this document is subject to legal disclaimers.

© NXP B.V. 2012. All rights reserved.

Table 29. Revision history *...continued*

Document ID	Release date	Data sheet status	Change notice	Supersedes
Modifications:	• Power consumption graphs added for parts LPC111x/102/202/302 (Figure 13 to Figure 17). • Parameter V_{hys} for I^2C bus pins: typical value corrected $V_{hys} = 0.05V_{DD}$ in Table 7. • Typical value for parameter N_{endu} added in Table 12 “Flash characteristics”. • I^2C-bus pins configured as standard mode pins, parameter I_{OL} changed to 3.5 mA (minimum) for $2.0\ V \leq V_{DD} \leq 3.6\ V$. • Section 11.6 “ElectroMagnetic Compatibility (EMC)” added. • Power-up characterization added (Section 10.1 “Power-up ramp conditions”).			
LPC1111_12_13_14 v.3	20101110	Product data sheet	-	LPC1111_12_13_14 v.2
Modifications:	• Parts LPC111x/102/202/302 added (LPC1100L series). • Power consumption data for parts LPC111x/102/202/302 added in Table 7. • PLL output frequency limited to 100 MHz in Section 7.15.2. • Description of $\overline{RESET}$ and WAKEUP functions updated in Section 6. • WDT description updated in Section 7.14. The WDT is a 24-bit timer. • Power profiles added to Section 2 and Section 7 for parts LPC111x/102/202/302.			
LPC1111_12_13_14 v.2	20100818	Product data sheet	-	LPC1111_12_13_14 v.1
Modifications:	• V_{ESD} limit changed to −6500 V (min) /+6500 V (max) in Table 6. • t_{DS} updated for SPI in master mode (Table 17). • Deep-sleep mode functionality changed to allow BOD and watchdog oscillator as the only analog blocks allowed to remain running in Deep-sleep mode (Section 7.15.5.3). • V_{DD} range changed to $3.0\ V \leq V_{DD} \leq 3.6\ V$ in Table 15. • Reset state of pins and start logic functionality added in Table 3 to Table 5. • Section 7.16.1 added. • Section “Memory mapping control” removed. • V_{OH} and I_{OH} specifications updated for high-drive pins in Table 7. • Section 9.4 added.			
LPC1111_12_13_14 v.1	20100416	Product data sheet	-	-

All information provided in this document is subject to legal disclaimers.

© NXP B.V. 2012. All rights reserved.

16. Legal information

16.1 Data sheet status

Document status[1][2]	Product status[3]	Definition
Objective [short] data sheet	Development	This document contains data from the objective specification for product development.
Preliminary [short] data sheet	Qualification	This document contains data from the preliminary specification.
Product [short] data sheet	Production	This document contains the product specification.

[1] Please consult the most recently issued document before initiating or completing a design.

[2] The term 'short data sheet' is explained in section "Definitions".

[3] The product status of device(s) described in this document may have changed since this document was published and may differ in case of multiple devices. The latest product status information is available on the Internet at URL http://www.nxp.com.

16.2 Definitions

Draft — The document is a draft version only. The content is still under internal review and subject to formal approval, which may result in modifications or additions. NXP Semiconductors does not give any representations or warranties as to the accuracy or completeness of information included herein and shall have no liability for the consequences of use of such information.

Short data sheet — A short data sheet is an extract from a full data sheet with the same product type number(s) and title. A short data sheet is intended for quick reference only and should not be relied upon to contain detailed and full information. For detailed and full information see the relevant full data sheet, which is available on request via the local NXP Semiconductors sales office. In case of any inconsistency or conflict with the short data sheet, the full data sheet shall prevail.

Product specification — The information and data provided in a Product data sheet shall define the specification of the product as agreed between NXP Semiconductors and its customer, unless NXP Semiconductors and customer have explicitly agreed otherwise in writing. In no event however, shall an agreement be valid in which the NXP Semiconductors product is deemed to offer functions and qualities beyond those described in the Product data sheet.

16.3 Disclaimers

Limited warranty and liability — Information in this document is believed to be accurate and reliable. However, NXP Semiconductors does not give any representations or warranties, expressed or implied, as to the accuracy or completeness of such information and shall have no liability for the consequences of use of such information. NXP Semiconductors takes no responsibility for the content in this document if provided by an information source outside of NXP Semiconductors.

In no event shall NXP Semiconductors be liable for any indirect, incidental, punitive, special or consequential damages (including - without limitation - lost profits, lost savings, business interruption, costs related to the removal or replacement of any products or rework charges) whether or not such damages are based on tort (including negligence), warranty, breach of contract or any other legal theory.

Notwithstanding any damages that customer might incur for any reason whatsoever, NXP Semiconductors' aggregate and cumulative liability towards customer for the products described herein shall be limited in accordance with the *Terms and conditions of commercial sale* of NXP Semiconductors.

Right to make changes — NXP Semiconductors reserves the right to make changes to information published in this document, including without limitation specifications and product descriptions, at any time and without notice. This document supersedes and replaces all information supplied prior to the publication hereof.

Suitability for use — NXP Semiconductors products are not designed, authorized or warranted to be suitable for use in life support, life-critical or safety-critical systems or equipment, nor in applications where failure or malfunction of an NXP Semiconductors product can reasonably be expected to result in personal injury, death or severe property or environmental damage. NXP Semiconductors and its suppliers accept no liability for inclusion and/or use of NXP Semiconductors products in such equipment or applications and therefore such inclusion and/or use is at the customer's own risk.

Applications — Applications that are described herein for any of these products are for illustrative purposes only. NXP Semiconductors makes no representation or warranty that such applications will be suitable for the specified use without further testing or modification.

Customers are responsible for the design and operation of their applications and products using NXP Semiconductors products, and NXP Semiconductors accepts no liability for any assistance with applications or customer product design. It is customer's sole responsibility to determine whether the NXP Semiconductors product is suitable and fit for the customer's applications and products planned, as well as for the planned application and use of customer's third party customer(s). Customers should provide appropriate design and operating safeguards to minimize the risks associated with their applications and products.

NXP Semiconductors does not accept any liability related to any default, damage, costs or problem which is based on any weakness or default in the customer's applications or products, or the application or use by customer's third party customer(s). Customer is responsible for doing all necessary testing for the customer's applications and products using NXP Semiconductors products in order to avoid a default of the applications and the products or of the application or use by customer's third party customer(s). NXP does not accept any liability in this respect.

Limiting values — Stress above one or more limiting values (as defined in the Absolute Maximum Ratings System of IEC 60134) will cause permanent damage to the device. Limiting values are stress ratings only and (proper) operation of the device at these or any other conditions above those given in the Recommended operating conditions section (if present) or the Characteristics sections of this document is not warranted. Constant or repeated exposure to limiting values will permanently and irreversibly affect the quality and reliability of the device.

Terms and conditions of commercial sale — NXP Semiconductors products are sold subject to the general terms and conditions of commercial sale, as published at http://www.nxp.com/profile/terms, unless otherwise agreed in a valid written individual agreement. In case an individual agreement is concluded only the terms and conditions of the respective agreement shall apply. NXP Semiconductors hereby expressly objects to applying the customer's general terms and conditions with regard to the purchase of NXP Semiconductors products by customer.

No offer to sell or license — Nothing in this document may be interpreted or construed as an offer to sell products that is open for acceptance or the grant, conveyance or implication of any license under any copyrights, patents or other industrial or intellectual property rights.

All information provided in this document is subject to legal disclaimers.

© NXP B.V. 2012. All rights reserved.

Export control — This document as well as the item(s) described herein may be subject to export control regulations. Export might require a prior authorization from competent authorities.

Non-automotive qualified products — Unless this data sheet expressly states that this specific NXP Semiconductors product is automotive qualified, the product is not suitable for automotive use. It is neither qualified nor tested in accordance with automotive testing or application requirements. NXP Semiconductors accepts no liability for inclusion and/or use of non-automotive qualified products in automotive equipment or applications.

In the event that customer uses the product for design-in and use in automotive applications to automotive specifications and standards, customer (a) shall use the product without NXP Semiconductors' warranty of the product for such automotive applications, use and specifications, and (b) whenever customer uses the product for automotive applications beyond NXP Semiconductors' specifications such use shall be solely at customer's own risk, and (c) customer fully indemnifies NXP Semiconductors for any liability, damages or failed product claims resulting from customer design and use of the product for automotive applications beyond NXP Semiconductors' standard warranty and NXP Semiconductors' product specifications.

16.4 Trademarks

Notice: All referenced brands, product names, service names and trademarks are the property of their respective owners.

I²C-bus — logo is a trademark of NXP B.V.

17. Contact information

For more information, please visit: **http://www.nxp.com**

For sales office addresses, please send an email to: **salesaddresses@nxp.com**

All information provided in this document is subject to legal disclaimers.

© NXP B.V. 2012. All rights reserved.

18. Contents

1 General description . . . 1
2 Features and benefits . . . 1
3 Applications . . . 3
4 Ordering information . . . 3
4.1 Ordering options . . . 5
5 Block diagram . . . 7
6 Pinning information . . . 9
6.1 Pinning . . . 9
6.2 Pin description . . . 16
7 Functional description . . . 42
7.1 ARM Cortex-M0 processor . . . 42
7.2 On-chip flash program memory . . . 42
7.3 On-chip SRAM . . . 42
7.4 Memory map . . . 42
7.5 Nested Vectored Interrupt Controller (NVIC) . . . 44
7.5.1 Features . . . 44
7.5.2 Interrupt sources . . . 45
7.6 IOCONFIG block . . . 45
7.7 Fast general purpose parallel I/O . . . 45
7.7.1 Features . . . 45
7.8 UART . . . 46
7.8.1 Features . . . 46
7.9 SPI serial I/O controller . . . 46
7.9.1 Features . . . 46
7.10 I^2C-bus serial I/O controller . . . 47
7.10.1 Features . . . 47
7.11 10-bit ADC . . . 47
7.11.1 Features . . . 47
7.12 General purpose external event counter/timers . . . 48
7.12.1 Features . . . 48
7.13 System tick timer . . . 48
7.14 Watchdog timer (LPC1100 series, LPC111x/101/201/301) . . . 48
7.14.1 Features . . . 48
7.15 Windowed WatchDog Timer (LPC1100L and LPC1100XL series) . . . 49
7.15.1 Features . . . 49
7.16 Clocking and power control . . . 49
7.16.1 Crystal oscillators . . . 49
7.16.1.1 Internal RC oscillator . . . 50
7.16.1.2 System oscillator . . . 50
7.16.1.3 Watchdog oscillator . . . 51
7.16.2 System PLL . . . 51
7.16.3 Clock output . . . 51
7.16.4 Wake-up process . . . 51
7.16.5 Power control . . . 51
7.16.5.1 Power profiles (LPC1100L and LPC1100XL series only) . . . 51
7.16.5.2 Sleep mode . . . 52
7.16.5.3 Deep-sleep mode . . . 52
7.16.5.4 Deep power-down mode . . . 52
7.17 System control . . . 52
7.17.1 Start logic . . . 52
7.17.2 Reset . . . 53
7.17.3 Brownout detection . . . 53
7.17.4 Code security (Code Read Protection - CRP) 53
7.17.5 APB interface . . . 54
7.17.6 AHBLite . . . 54
7.17.7 External interrupt inputs . . . 54
7.18 Emulation and debugging . . . 54
8 Limiting values . . . 55
9 Static characteristics . . . 56
9.1 BOD static characteristics . . . 62
9.2 Power consumption LPC1100 series (LPC111x/101/201/301) . . . 63
9.3 Power consumption LPC1100L series (LPC111x/002/102/202/302) . . . 66
9.4 Power consumption LPC1100XL series (LPC111x/103/203/303/323/333) . . . 69
9.5 CoreMark data . . . 72
9.6 Peripheral power consumption . . . 73
9.7 Electrical pin characteristics . . . 74
10 Dynamic characteristics . . . 77
10.1 Power-up ramp conditions . . . 77
10.2 Flash memory . . . 77
10.3 External clock . . . 78
10.4 Internal oscillators . . . 79
10.5 I/O pins . . . 80
10.6 I^2C-bus . . . 81
10.7 SPI interfaces . . . 82
11 Application information . . . 85
11.1 ADC usage notes . . . 85
11.2 XTAL input . . . 85
11.3 XTAL Printed Circuit Board (PCB) layout guidelines . . . 86
11.4 Standard I/O pad configuration . . . 87
11.5 Reset pad configuration . . . 88
11.6 ElectroMagnetic Compatibility (EMC) . . . 88
12 Package outline . . . 89
13 Soldering . . . 97
14 Abbreviations . . . 104
15 Revision history . . . 105

continued >>

All information provided in this document is subject to legal disclaimers.

© NXP B.V. 2012. All rights reserved.

16 Legal information 107
16.1 Data sheet status 107
16.2 Definitions 107
16.3 Disclaimers 107
16.4 Trademarks 108
17 Contact information 108
18 Contents 109

Please be aware that important notices concerning this document and the product(s) described herein, have been included in section 'Legal information'.

© NXP B.V. 2012. **All rights reserved.**

For more information, please visit: http://www.nxp.com
For sales office addresses, please send an email to: salesaddresses@nxp.com

Date of release: 2 October 2012
Document identifier: LPC111X