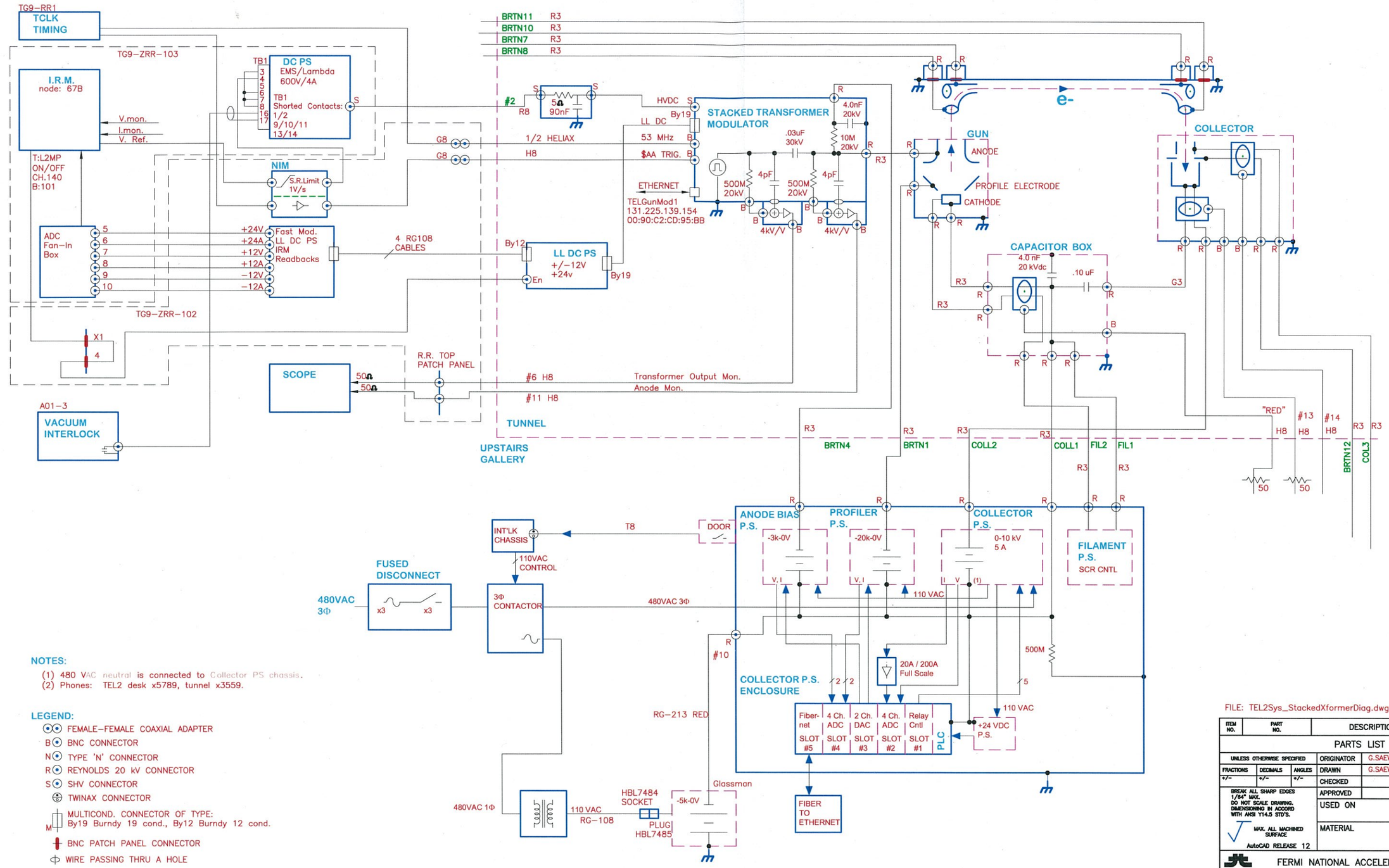

NOTES:

(1) 480 VAC neutral is connected to Collector PS chassis.
(2) Phones: TEL2 desk x5789, tunnel x3559.

LEGEND:

- FEMALE-FEMALE COAXIAL ADAPTER
- B BNC CONNECTOR
- N TYPE 'N' CONNECTOR
- R REYNOLDS 20 kV CONNECTOR
- S SHV CONNECTOR
- TWINAX CONNECTOR
- M MULTICOND. CONNECTOR OF TYPE: By19 Burndy 19 cond., By12 Burndy 12 cond.
- BNC PATCH PANEL CONNECTOR
- WIRE PASSING THRU A HOLE

R3: RG-213 RED
G3: RG-213 GREEN
G8: RG-58 GREEN
R8: RG-58 RED
T8: RG-108
H8: 3/8" HELIAX

FILE: TEL2Sys_StackedXformerDiag.dwg

ITEM NO.	PART NO.	DESCRIPTION OR SIZE	QTY. REQ.
PARTS LIST			

UNLESS OTHERWISE SPECIFIED					
FRACTIONS +/-	DECIMALS +/-	ANGLES +/-	ORIGINATOR	G.SAEWERT	3/13/06
			DRAWN	G.SAEWERT	9/30/09
			CHECKED		
BREAK ALL SHARP EDGES 1/64" MAX. DO NOT SCALE DRAWING. DIMENSIONING IN ACCORD WITH ANSI Y14.5 STD'S.			APPROVED		
MAX. ALL MACHINED SURFACE			USED ON		
AutoCAD RELEASE 12			MATERIAL		

FERMI NATIONAL ACCELERATOR LABORATORY
UNITED STATES DEPARTMENT OF ENERGY

TEVATRON
ELECTORN LENS 2
HV SYSTEMS DIARGRAM W/STACKED XFORMER

SCALE	FILMED	DRAWING NUMBER	REV.
		-ED-	