Amendment 1 to Eng. Note RSB 564
Tevatron Electron Lens 2 Solenoid (TEL2)

B. Soyars

May 15, 2006

Introduction

This amendment adds technical detail to the TEL2 Engineering Note, in the context of the operational vacuum leak of a similar unit (TEL1), discovered in March 2006. TEL1 experienced a He -to-insulating vacuum leak due to failure of double-walled bellows on the bottom portion of the He supply and return bayonet connections. Reference the commentary in Amendment 1 of the TEL1 Engineering Note RSB 536. Similar issues appear to exist for TEL2, since it has identical design to that the original TEL1. A similar bellows failure should be anticipated.

Visual Inspection

A borescope inspection was made on the TEL2 helium bayonets (female end). We wished to confirm that the lower tube end was not unexpectedly protruding into the bayonet sheath, where stinger insertion could then mechanically stress the double-walled bellows. No stinger interference seen. The seat is relatively flush. There are some discolored welds, similar to TEL 1. Subsequent stinger insertions were successful.

Pressure Rating for Double-walled single phase bellows

A pressure rating for the double-walled single phase bellows was not explicitly given in the original Engineering Note. Therefore, provide a general, estimated pressure rating.

• During service in the Tevatron, maximum expected pressure is 180 psia during 1000 GeV quench. (TeV operated at 980 GeV).

• Actual Geometry: TEL drawing 128-01-01-04 indicates this is metric size 48-8-0.2 x 2 (1 7/8" x 8 conv x 0.008" wall x 2 ply). The approximate ID is 1.25".

• Compare this to Flexonics hydraulically formed bellows: 1 ply SS 1.27" ID x 1.75"OD x 0.008" . The listed recommended Maximum Internal Pressure is 250 psi.

• Compare this to Flexonics mechanically formed bellows: 2 ply SS 1.33" ID x 1.78" OD x 0.010 (total wall). Listed recommended Max Internal Pressure is 250 psi.

- A slightly smaller two-ply bellows: 1.11" ID x 1.56" OD x 0.009 (total wall). Listed Max Internal Pressure is 360 psi.

- A slightly larger two-ply bellows: 1.53 " ID x 2.03" OD x 0.01 (total wall). Listed Max Internal Pressure is 210 psi.

• The Flexonics catalog definition of Maxium Internal Pressure is for a bellows with L not exceeding OD (otherwise squirm likely becomes limiting factor). The TEL bellows approximately matches this, L=OD. Something helping to reduce squirm tendencies in the TEL case is the internal tube acting as internal guide.

• General conclusion is pressure rating of about 250 psi. The given TEL bellows design information is generally consistent with TEL MAWP of 260 psia.

PRESSURE VESSEL ENGINERING NOTE
PER CHAPTER 5031

Prepared by: Alex Martinez
Preparation date: 9/21/04

1. Description and Identification
Fill in the label information below:

This vessel conforms to Fermilab ES&H Manual Chapter 5031

Vessel Title Tevatron Electron Lens 2 Solenoid

Vessel Number RSB 564

Obtain from Safety

Officer Division/Section

Vessel Drawing Number

Maximum Allowable Working Pressures (MAWP):
Internal Pressure 260 psia
External Pressure

Working Temperature Range -452 °F 70 °F

Contents Liquid Helium

Designer/Manufacturer FNAL/IHEP (Institute for High Energy Physics, Protvino, Russia)

Test Pressure (if tested at Fermi) Acceptance Date:

Document per Chapter 5034 of the Fermilab ES&H Manual

PSI, Hydraulic Pneumatic

Accepted as conforming to standard by

Roger L. Dixon

of Division/Section AD Date: 10-1-04
required

Actual signature

NOTE: Any subsequent changes in contents, pressures, temperatures, valving, etc., which affect the safety of this vessel shall require another review.

Reviewed by: Jerry Leibfritz Date: 9/29/04

Director's signature (or designee) if the vessel is for manned areas but doesn't conform to the requirements of the chapter.

Date:

Amendment No.:	Reviewed by:	Date:

Lab Property Number(s): _____

Lab Location Code: A10 in Tevatron(tested at E4R) (obtain from safety officer)

Purpose of Vessel(s): Solenoid is used for compensating for the beam-beam parasitic effects in the Tevatron

Vessel Capacity/Size: 5.7 ft^3 Diameter: 12.36 in. Length: 101.97 in

Normal Operating Pressure (OP) 17 PSIG

MAWP-OP = 260 - 17 = 243 PSIA

List the numbers of all pertinent drawings and the location of the originals.

Drawing #	Location of Original
1128-01-00 thru 1128-01-02	IHEP in Protvino, Russia
	(copies are attached)

2. Design Verification

Does the vessel(s) have a U stamp? Yes_____ No_X___. If "Yes", fill out data below and skip page 3; if "No", fill out page 3 and skip this page.

Staple photo of U stamp plate below.

Copy "U" label details to the side

Copy data here:

Provide ASME design calculations in an appendix. On the sketch below, circle all applicable sections of the ASME code per Section VIII, Division I. (Only for non-coded vessels)

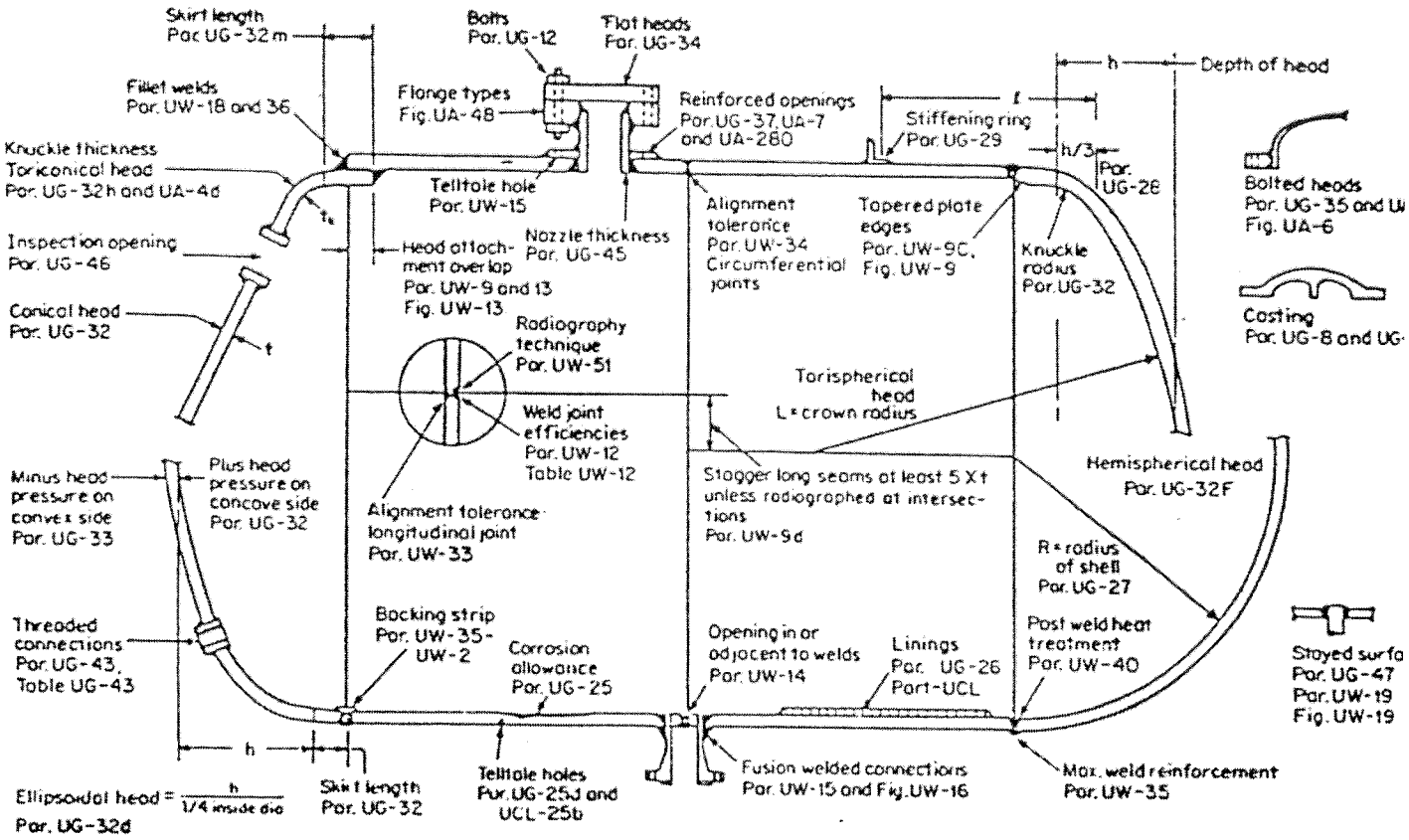

Figure 1. ASME Code: Applicable Sections

Summary of ASME Code

Item	Reference ASME Code Section	CALCULATION RESULT (Required thickness or stress level vs. actual thickness calculated stress level)
_____	Calculations in the appendix	_____ vs _____
_____	_____	_____ vs _____
_____	_____	_____ vs _____
_____	_____	_____ vs _____
_____	_____	_____ vs _____

3. System Venting Verification Provide the system schematic in the Appendix.

Is it possible to isolate the relief valves by a valve from the vessel?

Yes___ No_X_

If "Yes", the system must conform to code rules. Provide an explanation on the appended schematic. (An isolatable vessel, not conforming to code rule is non-compliant under this chapter.)

Is the relief cracking pressure set at or below the M.A.W.P.?

Yes __X__ No_____ Actual setting _30__PSIG

(A "No" response violates this chapter.)

Is the pressure drop of the relief system at maximum anticipated flow such that vessel pressure never rises above the following? (UG 125)

Yes__X__ No_____ 110% of MAWP (one relief)
116% of MAWP (multiple reliefs)
121% of MAWP(unexpected heat source)

Provide test or calculational proof in the Appendix. (Non-conforming pressure rises is non-compliant under this Chapter.)

List of reliefs and settings:

Manufacturer	Model #	Set Pressure	Flow Rate	Size
FNAL	Kautzky	30 psig	1864 scfm air @ 150 psig inlet	0.688 in^2 dis. area
Anderson Greenwood	81SF1216-G	240 psig	2097 scfm air	0.503 in^2

Does the primary relief device follow UG-129? Yes_X__ No_____
(A "No" response is non-compliant under this chapter)

4. Operating Procedure

Is an operating procedure necessary for the safe operation of this vessel?

Yes_____ No__X___ (If "Yes", it must be appended)

5. Welding Information

Has the vessel been fabricated in a non-code shop? Yes__X__ No_____

If "Yes", append a copy of the welding shop statement of welder qualification (Procedure Qualification Record, PQR) which references the Welding Procedure Specification (WPS) used to weld this vessel.

6. Exceptional, Existing, Used and Unmanned Area Vessels

Is this vessel or any part thereof in the above categories?
Yes____ No__X__

If "Yes", follow the Engineering Note requirements for documentation and append to Note.

This pressure vessel is part of the Beam-Beam Compensation Project. The project is intended to compensate for the beam-beam parasitic effects in the Tevatron using a high current, low energy electron beam. The system consists of a main superconducting solenoid and two conventional solenoids. The main superconducting solenoid is the subject of this engineering note. Once completed the solenoid will be tested at the E4R test refrigerator and then installed in it's final location in the Tevatron at A10. In order to provide cryogens to the solenoid, a new A10 bypass is being constructed to allow for the necessary cryogenic connections to the solenoid at this location. The superconducting solenoid is designed to use single phase helium flow from a typical Tevatron refrigerator as well as standard nitrogen flow for cooling of the shield. The solenoid pressure vessel consists of an outer main shell, an inner main shell, two flat heads and a side appendage for tapping of the cryogens and power connections, see drawing below.

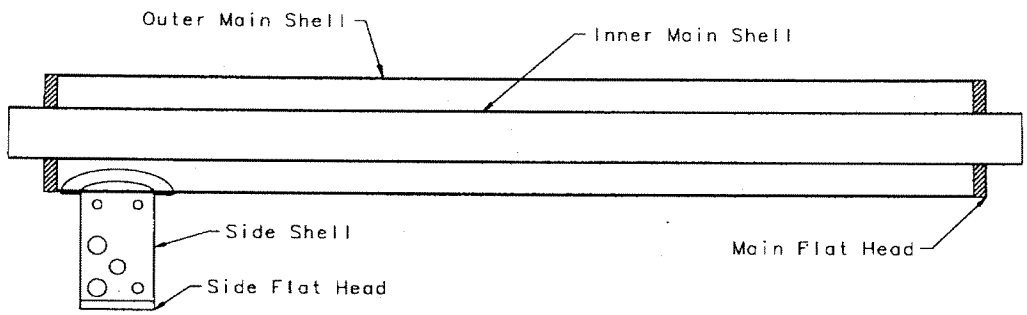

The outer main shell (which consists of four clam shell pieces), the flat heads, the side shell (two pieces) and the flat head on the side shell are all made of 321 stainless steel. The inner shell is made of 304L stainless steel. Table 1B of Section II, Part D of the ASME Code lists the maximum allowable stress value for the 321 and 304L stainless steel used on this vessel as 20,000 psi. The certification reports for the material used on this vessel are included in the appendix. The vessel was built at IHEP (Institute for High Energy Physics) in Protvino, Russia. Because the vessel was built in a non-Code shop without material control and independent third party inspection, Fermilab requires that the maximum stress value be further reduced by multiplying the stress value by 0.8. This is defined as the Fermilab "K" value. Also included in the appendix are the Russian equivalent of the welder certification reports.

Calculations will be performed in the following manner: given the MAWP of the vessel, the required material thicknesses will be determined using the appropriate ASME Code formulas. The calculated minimum thicknesses will then be compared to the actual thicknesses. If the calculated required thickness is less than or equal to the actual thickness, the component will be considered safe for use at the desired MAWP.

The quantities defined below are used in the formulas in the following sections.

P = internal design pressure = 260 psi
R = inside radius of shell = 6.18 inches for main shell
= 3.74 inches for side shell
S = maximum allowable stress value = 20,000 psi
t = minimum required thickness in inches
K = Fermilab K factor = 0.8
E = weld joint efficiency
L = length of inner shell = 101.97 inches
D_0 = outside diameter of inner shell = 5.61 inches
d = diameter of head = 12.36 inches for main shell
= 7.48 inches for side shell
C = flat head factor = 0.33m where m=tr/ts

UG-27 Thickness of Shells Under Internal Pressure

Outer Main Shell

The thickness of shells under internal pressure shall be not less than that computed by the following formulas. For cylindrical shells the minimum thickness shall be the greater thickness as given by (1) or (2) below.

(1) Circumferential Stress (Longitudinal Joints)

$$t = \frac{PR}{SKE - 0.6P} = \frac{(260)(6.18)}{(20{,}000)(0.8)(0.6) - 0.6(260)}$$

$$t = 0.170 \; inches$$

(note that E=0.6 because of the longitudinal welds in the shell, the shell is welded as a four piece clam shell, no radiographic examination)

(2) Longitudinal Stress (Circumferential Joints)

$$t = \frac{PR}{2SKE + 0.4P} = \frac{(260)(6.18)}{2(20{,}000)(0.8)(0.6) + 0.4(260)}$$

$$t = 0.083 \; inches$$

(note that E=0.6 because of the circumferential welds between the heads and the shell, no radiographic examination)

The actual thickness of the outer shell is 0.197 inches which is greater than the minimum required thickness of 0.170 inches for the circumferential stress and 0.083 inches for the longitudinal stress.

Side Shell

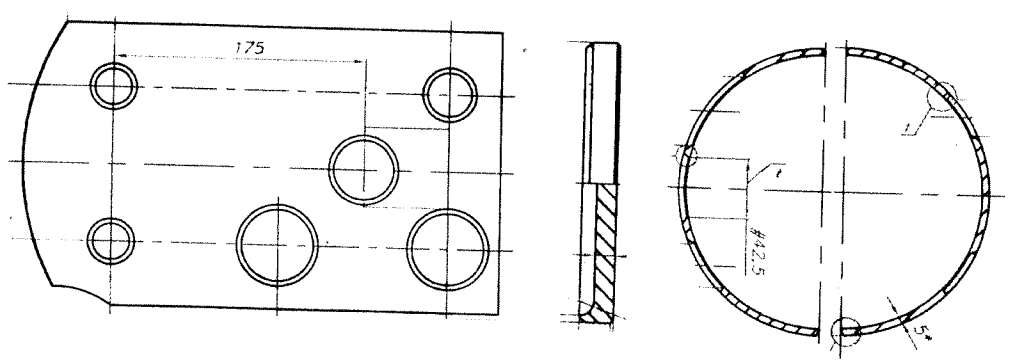

The thickness of shells under internal pressure shall be not less than that computed by the following formulas. For cylindrical shells the minimum thickness shall be the greater thickness as given by (1) or (2) below.

(1) Circumferential Stress (Longitudinal Joints)

$$t = \frac{PR}{SKE - 0.6P} = \frac{(260)(3.74)}{(20{,}000)(0.8)(0.6) - 0.6(260)}$$

$$t = 0.103 \; inches$$

(note that E=0.6 because of the longitudinal weld in the shell, the shell is welded as a two piece clam shell, no radiographic examination)

(3) Longitudinal Stress (Circumferential Joints)

$$t = \frac{PR}{2SKE + 0.4P} = \frac{(260)(3.74)}{2(20{,}000)(0.8)(0.6) + 0.4(260)}$$

$$t = 0.050 \; inches$$

(note that E=0.6 because of the circumferential weld between the heads and the shell, no radiographic examination)

The actual thickness of the outer shell is 0.197 inches which is greater than the minimum required thickness of 0.103 inches for the circumferential stress and 0.050 inches for the longitudinal stress.

UG-28 Thickness of Shells and Tubes Under External Pressure

Inner Main Shell

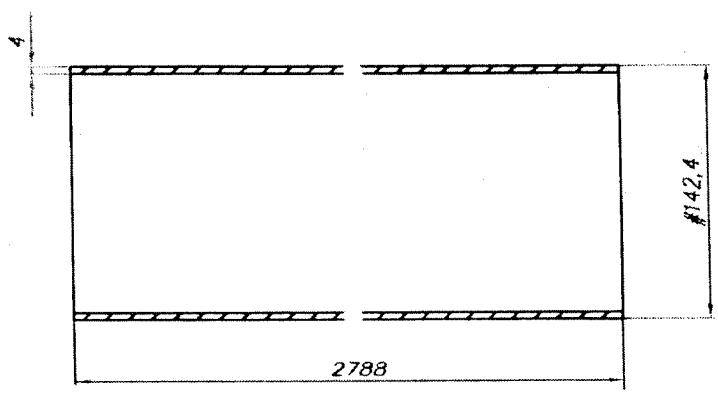

The required minimum thickness of a cylindrical shell or tube under external pressure, either seamless or with longitudinal butt joints shall be determined by the following procedure.

$L/D_o = 101.97/5.61 = 18.176$

$D_o/t = 5.61/0.157 = 35.732$

Determine the value of Factor A by entering Fig. G in Subpart 3 of Section II, Part D using the values of L/D_o and D_o/t.

Factor A = 0.00095

Using the value of A, enter the applicable material chart in Subpart 3 of Section II, Part D for the material under consideration, 304L stainless steel and determine Factor B.

Factor B = 9100

Now calculate the maximum allowable external working pressure using the following formula.

$$Pa = \frac{4B}{3(D_o/t)} = \frac{4(9100)}{3(35.732)} = 340\ psi$$

$$Pa = (340\ psi)\ x\ K = (340)(0.8) = 272\ psi$$

The maximum allowable working pressure of 272 psi is greater than the design pressure of 260 psi.

UG-34 Thickness of Unstayed Flat Heads and Covers

Outer Main Shell

The minimum required thickness of flat unstayed circular heads, covers and blind flanges shall be calculated by the following formula:

$$t = d\sqrt{CP/SKE}$$

where tr = required thickness of outer main shell = 0.170 inches
ts = actual thickness of outer main shell = 0.197 inches
m = tr/ts = 0.170 / 0.197 = 0.863
C = 0.33m for a b-2 style flat head
= 0.33(0.863) = 0.285

$$t = d\sqrt{CP/SKE} = (12.36)\sqrt{(0.285)(260)/(20{,}000)(0.8)(1)}$$

$$t = 0.841\ inches$$

(note that E=1.0 because there are no welds in the head, the head is formed as one piece)

The actual thickness of the flat head is 0.913 inches which is greater than the minimum required thickness of 0.841 inches. In reality, the geometry is a bit more complicated. The flat head has a center hole which is fully supported end to end by the inner shell to form a concentric tube geometry. This inner bore provides added support for the flat end plates.

Side Shell

The minimum required thickness of flat unstayed circular heads, covers and blind flanges shall be calculated by the following formula:

$$t = d\sqrt{CP / SKE}$$

where tr = required thickness of outer main shell = 0.103 inches
ts = actual thickness of outer main shell = 0.197 inches
m = tr/ts = 0.170 / 0.197 = 0.523
C = 0.33m for a b-2 style flat head
= 0.33(0.523) = 0.173, if C < 0.2 use 0.2

$$t = d\sqrt{CP / SKE} = (7.48)\sqrt{(0.200)(260)/(20{,}000)(0.8)(1)}$$

$$t = 0.426\ inches$$

(note that E=1.0 because there are no welds in head, head is formed as one piece)

The actual thickness of the flat head is 0.551 inches which is greater than the minimum required thickness of 0.426 inches.

UG-37 Reinforcement Required for Openings in Shells and Formed Heads

Side Shell

Now we need to look at the reinforcement required for the opening in the main shell where the side shell is attached. Below is a sketch of the geometry.

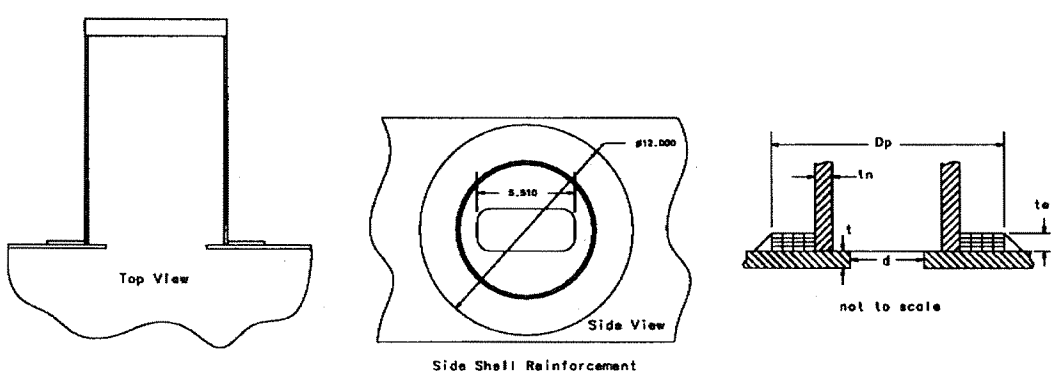

The quantities defined below are used in the following formulas.

d = finished diameter of opening = 5.51 inches
tr = required thickness of main shell = 0.170 inches
tn = wall thickness of side shell = 0.197 inches
trn = required thickness of side shell = 0.103 inches
t = wall thickness of main shell = 0.197 inches

te = thickness of reinforcing element = 0.236 inches
Dp = outside diameter of reinforcing element = 12 inches
fr1, fr2, fr3, fr4 = strength reduction factor = 1.0
F = correction factor = 1.0
E, E1 = joint coefficient = 1.0
leg = weld leg = 0.197 inches

The total cross-sectional area of reinforcement required in any given plane through the opening for a shell under internal pressure shall not be less than that given be A below.

$$A = d\ tr\ F + 2\ tn\ tr\ F\ (1 - fr1) = (5.51)(0.170)(1.0) + 2(0.197)(0.170)(1.0)(1 - 1)$$

$A = 0.9367$ in.^{2} area of reinforcement required

Now we need to calculate the area of reinforcement available

$$A_1 = d\ (E1\ t - F\ tr) - 2\ tn\ (E1\ t - F\ tr)\ (1 - fr1)$$
$$A_1 = 2\ (t + tn)\ (E1\ t - F\ tr) - 2\ tn\ (E1\ t - F\ tr)\ (1 - fr1) \quad \text{whichever is greater}$$

$$A_1 = (5.51)[(1.0)(0.197) - (1.0)(0.170)] - 2(0.197)[(1.0)(0.197) - (1.0)(0.170)]\ (1 - 1)$$
$$= 0.1488 \text{ in.}^2$$

$$A_1 = 2(0.197 + 0.197)[(1.0)(0.197) - (1.0)(0.170)] - 2(0.197)[(1.0)(0.197) - (1.0)(0.170)](1 - 1)$$
$$= 0.0213 \text{ in.2}$$

use $A_1 = 0.1488$ in.^{2}

$$A_2 = 5\ (tn - trn)\ fr2\ t = 5[0.197 - 0.103]\ (1.0)(0.197) = 0.0926 \text{ in.}^2$$
$$A_2 = 2\ (tn - trn)\ (2.5tn + te)\ fr2 = 2[0.197 - 0.103][2.5(0.197) + 0.236](1.0) = 0.1370 \text{ in.}^2$$

use smaller value, $A_2 = 0.0926$ in.^{2}

$$A_{41} = (leg)^2 fr3 = (0.236)^2(1.0) = 0.0557 \text{ in.}^2$$
$$A_{42} = (leg)^2 fr4 = (0.236)^2(1.0) = 0.0557 \text{ in.}^2$$

$$A_5 = (Dp - d - 2tn)\ te\ fr4 = [12 - 5.51 - 2(0.197)]\ (0.236)\ (1.0) = 1.4387 \text{ in.}^2$$

Now see if $A_1 + A_2 + A_{41} + A_{42} + A_5 > A$

$$0.1488 + 0.0926 + 0.0557 + 0.0557 + 1.4387 = 1.7915 \text{ in.}^2 > 0.9367 \text{ in.}^2$$

The reinforcement available is 1.7915 in.^{2} which is greater than the required reinforcement of 0.9367 in.^{2}

Now we need to look at the reinforcement required for the utility penetrations (power connections, relief port, etc.) in the side shell itself. Below are sketches of the five different types of penetrations in the side shell.

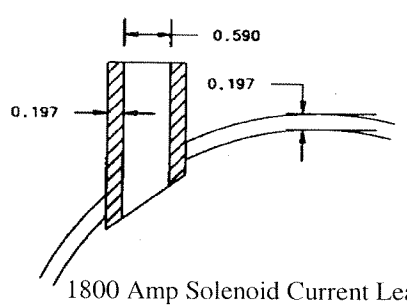

1800 Amp Solenoid Current Lead

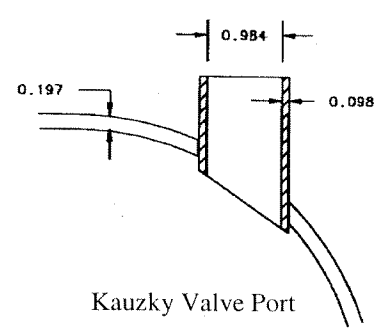

Kauzky Valve Port

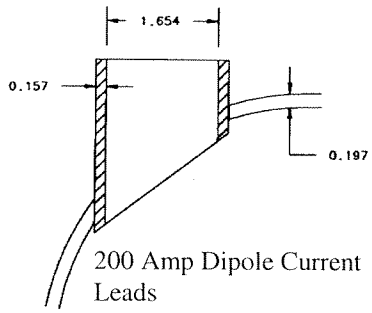

200 Amp Dipole Current Leads

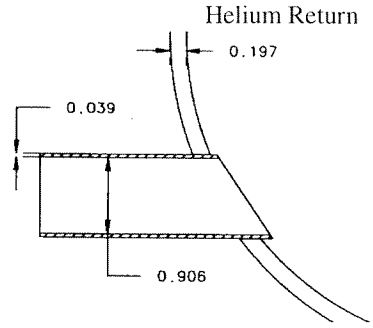

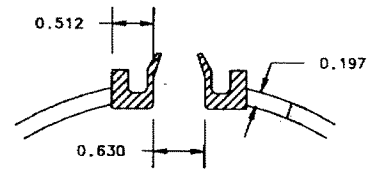

Current Element

Reinforcement required for the two 1800 amp current lead penetrations

d = finished diameter of opening = 0.590 inches
tr = required thickness of shell = 0.103 inches
tn = nozzle wall thickness = 0.197 inches
t = wall thickness of shell = 0.197 inches
fr1, fr2 = strength reduction factor = 1.0
F = correction factor = 1.0
E, E1 = joint coefficient = 1.0
leg = weld leg = 0.197 inches

$A_{req} = d\ tr\ F + 2\ tn\ tr\ F\ (1 - fr1) = (0.590)(0.103)(1) + 2(0.197)(0.103)(1 - 1) = 0.0608\ in.^2$

$A_1 = d\ (E1\ t - F\ tr) - 2\ tn\ (E1\ t - F\ tr)\ (1 - fr1)$
$A_1 = 2\ (t + tn)\ (E1\ t - F\ tr) - 2\ tn\ (E1\ t - F\ tr)\ (1 - fr1)$ whichever is greater

$A_1 = (0.590)[(1.0)(0.197) - (1.0)(0.103)] - 2(0.197)[(1.0)(0.197) - (1.0)(0.103)]\ (1 - 1)$
$= 0.0555\ in.^2$

$A_1 = 2(0.197 + 0.197)[(1.0)(0.197) - (1.0)(0.103)] - 2(0.197)[(1.0)(0.197) - (1.0)(0.103)](1 - 1)$
$= 0.0741$ in.2

use $A_1 = 0.0741\ in.^2$

$A_{41} = (leg)^2 fr2 = (0.197)^2(1.0) = 0.0388\ in.^2$

$A1 + A41 = 0.0741\ in.^2 + 0.0388\ in.^2 = 0.1129\ in.^2 > A_{req} = 0.0608\ in.^2$

Reinforcement required for the Kautzky valve port penetration

d = finished diameter of opening = 0.984 inches
tr = required thickness of shell = 0.103 inches
tn = nozzle wall thickness = 0.098 inches
t = wall thickness of shell = 0.197 inches
fr1, fr2 = strength reduction factor = 1.0
F = correction factor = 1.0
E, E1 = joint coefficient = 1.0
leg = weld leg = 0.197 inches

$A_{req} = d\ tr\ F + 2\ tn\ tr\ F\ (1 - fr1) = (0.984)(0.103)(1) + 2(0.098)(0.103)(1 - 1) = 0.1014\ in.^2$

$A_1 = d\ (E1\ t - F\ tr) - 2\ tn\ (E1\ t - F\ tr)\ (1 - fr1)$
$A_1 = 2\ (t + tn)\ (E1\ t - F\ tr) - 2\ tn\ (E1\ t - F\ tr)\ (1 - fr1)$ whichever is greater

$A_1 = (0.984)[(1.0)(0.197) - (1.0)(0.103)] - 2(0.098)[(1.0)(0.197) - (1.0)(0.103)]\ (1 - 1)$
$= 0.0925$ in.^{2}

$A_1 = 2(0.197 + 0.098)[(1.0)(0.197) - (1.0)(0.103)] - 2(0.098)[(1.0)(0.197) - (1.0)(0.103)](1 - 1)$
$= 0.0555$ in.2

use $A_1 = 0.0925$ in.^{2}

$A_{41} = (\text{leg})^2 \text{fr2} = (0.197)^2(1.0) = 0.0388$ in.^{2}

A1 + A41 = 0.0925 in.^{2} + 0.0388 in.^{2} = 0.1313 in.^{2} > A_{req} = 0.1014 in.^{2}

Reinforcement required for the 200 amp current lead penetrations

d = finished diameter of opening = 1.654 inches
tr = required thickness of shell = 0.103 inches
tn = nozzle wall thickness = 0.157 inches
t = wall thickness of shell = 0.197 inches
fr1, fr2 = strength reduction factor = 1.0
F = correction factor = 1.0
E, E1 = joint coefficient = 1.0
leg = weld leg = 0.197 inches

$A_{req} = d\ tr\ F + 2\ tn\ tr\ F\ (1 - fr1) = (1.654)(0.103)(1) + 2(0.157)(0.103)(1 - 1) = 0.1704$ in.^{2}

$A_1 = d\ (E1\ t - F\ tr) - 2\ tn\ (E1\ t - F\ tr)\ (1 - fr1)$
$A_1 = 2\ (t + tn)\ (E1\ t - F\ tr) - 2\ tn\ (E1\ t - F\ tr)\ (1 - fr1)$ whichever is greater

$A_1 = (1.654)[(1.0)(0.197) - (1.0)(0.103)] - 2(0.157)[(1.0)(0.197) - (1.0)(0.103)]\ (1 - 1)$
$= 0.1555$ in.^{2}

$A_1 = 2(0.197 + 0.157)[(1.0)(0.197) - (1.0)(0.103)] - 2(0.157)[(1.0)(0.197) - (1.0)(0.103)](1 - 1)$
$= 0.0666$ in.2

use $A_1 = 0.1555$ in.^{2}

$A_{41} = (\text{leg})^2 \text{fr2} = (0.197)^2(1.0) = 0.0388$ in.^{2}

A1 + A41 = 0.1555 in.^{2} + 0.0388 in.^{2} = 0.1943 in.^{2} > A_{req} = 0.1704 in.^{2}

Reinforcement required for the correction element penetration

d = finished diameter of opening = 0.630 inches
tr = required thickness of shell = 0.103 inches
tn = nozzle wall thickness = 0.512 inches
t = wall thickness of shell = 0.197 inches
fr1, fr2 = strength reduction factor = 1.0
F = correction factor = 1.0
E, E1 = joint coefficient = 1.0
leg = weld leg = 0.197 inches

$A_{req} = d\ tr\ F + 2\ tn\ tr\ F\ (1 - fr1) = (0.630)(0.103)(1) + 2(0.512)(0.103)(1 - 1) = 0.0649$ in.^{2}

$A_1 = d\ (E1\ t - F\ tr) - 2\ tn\ (E1\ t - F\ tr)\ (1 - fr1)$

$A_1 = 2\ (t + tn)\ (E1\ t - F\ tr) - 2\ tn\ (E1\ t - F\ tr)\ (1 - fr1)$ whichever is greater

$A_1 = (0.630)[(1.0)(0.197) - (1.0)(0.103)] - 2(0.512)[(1.0)(0.197) - (1.0)(0.103)]\ (1 - 1)$
$= 0.0592$ in.^{2}

$A_1 = 2(0.197 + 0.512)[(1.0)(0.197) - (1.0)(0.103)] - 2(0.512)[(1.0)(0.197) - (1.0)(0.103)](1 - 1)$
$= 0.1333$ in.2

use $A_1 = 0.1333$ in.^{2}

A1 = 0.1333 in.^{2} > A_{req} = 0.0649 in.^{2}

Reinforcement required for the helium return penetration

d = finished diameter of opening = 0.906 inches
tr = required thickness of shell = 0.103 inches
tn = nozzle wall thickness = 0.039 inches
t = wall thickness of shell = 0.197 inches
fr1, fr2 = strength reduction factor = 1.0
F = correction factor = 1.0
E, E1 = joint coefficient = 1.0
leg = weld leg = 0.197 inches

$A_{req} = d\ tr\ F + 2\ tn\ tr\ F\ (1 - fr1) = (0.906)(0.103)(1) + 2(0.039)(0.103)(1 - 1) = 0.0933$ in.^{2}

$A_1 = d\ (E1\ t - F\ tr) - 2\ tn\ (E1\ t - F\ tr)\ (1 - fr1)$
$A_1 = 2\ (t + tn)\ (E1\ t - F\ tr) - 2\ tn\ (E1\ t - F\ tr)\ (1 - fr1)$ whichever is greater

$A_1 = (0.906)[(1.0)(0.197) - (1.0)(0.103)] - 2(0.039)[(1.0)(0.197) - (1.0)(0.103)]\ (1 - 1)$
$= 0.0852$ in.^{2}

$A_1 = 2(0.197 + 0.039)[(1.0)(0.197) - (1.0)(0.103)] - 2(0.039)[(1.0)(0.197) - (1.0)(0.103)](1 - 1)$
$= 0.0444$ in.2

use $A_1 = 0.0852$ in.^{2}

$A_{41} = (leg)^2 fr2 = (0.197)^2(1.0) = 0.0388$ in.^{2}

A1 + A41 = 0.0852 in.^{2} + 0.0388 in.^{2} = 0.1240 in.^{2} > A_{req} = 0.0933 in.^{2}

Section UG-42 of the ASME Code states that when any two openings are spaced at less than two times their average diameter . . . the two openings shall be reinforced . . . with a combined reinforcement that has an area not less than the sum of the areas required for each opening. In our case this section does not apply because no two openings are spaced less than two times their average finished diameters. The diameters of the openings used in this calculation are the finished diameters with the nozzles in place not the openings on the shell plate before the nozzles are welded in place.

Relief Valve Sizing

Failure Modes

i) Loss of Vacuum – vacuum space filled with GHe or GN_2
ii) Fire Condition
iii) System Upsets – quenches

Case i) Loss of vacuum with vacuum space filled with gaseous helium or nitrogen.

According to CGA S-1.3, Section 5.2.2, the minimum required flow capacity for a relief system on insulated vessels for loss of vacuum with gaseous lading in the vacuum space can be calculated using the following formula:

$$Q_a = \frac{590 - T}{4(1660 - T)} G_i U A$$

where Gi = gas factor for an insulated container
= 52.5 for LHe at 200 psig or below flow rating pressure

T = temperature of gas at flow conditions in Rankine
= 10°R ≈ 5.6K

A = Outside surface area of the vessel in sq. feet
(only determine outside area, not inner bore area which is not likely to be exposed to the fire)
$=\pi(12.76)(103.78)+2[\pi/4(12.76^2 - 5.63^2)]+\pi(7.87)(12.91)+\pi/4(7.87)^2$
$= 4734.0 \text{ in.}^2 \cong 32.9 \text{ ft.}^2$

U = Overall heat transfer coefficient of the insulating material when saturated with gaseous lading, determined by dividing the thermal conductivity of the gas by the thickness of the insulation (k/x). We will calculate U's for both helium and nitrogen, since the vessel has a nitrogen cooled shield which if ruptured can dump nitrogen into the vacuum space.

k_{He} = 0.0871 Btu/hr ft °R at 300K
k_{N2} = 0.0149 Btu/hr ft °R at 300K

x = 0.75 in. (average insulation thickness)

U_{He} = 0.0871/(0.75/12) = 1.394 Btu/hr ft^2 °F (worst case)
U_{N2} = 0.0149/(0.75/12) = 0.238 Btu/hr ft^2 °F

$$Q_a = \frac{590 - 10}{4(1660 - 10)}(52.5)(1.394)(32.9) = 211.6\ scfm_{air}$$

Case ii) Fire Condition

According to CGA S-1.3, Section 5.3, the minimum flow capacity required for a relief system under fire conditions in insulated vessels containing cryogenic fluids which are subjected to a 1200 °F external environment can be calculated using the following formula:

$$Q_a = G_i U A^{0.82}$$

where G_i = gas factor for an insulated container
= 52.5 for LHe at 200 psig or below flow rating pressure

A = Total outside surface area of the container in sq. feet
(only determine outside area, not inner bore area which is not likely to be exposed to the fire)
$=\pi(12.76)(103.78)+2[\pi/4(12.76^2-5.63^2)]+\pi(7.87)(12.91)+\pi/4(7.87)^2$
$= 4734.0 \text{ in.}^2 \cong 32.9 \text{ ft.}^2$

U = Overall heat transfer coefficient of the insulating material when saturated with gaseous lading, determined by dividing the thermal conductivity of the gas by the thickness of the insulation (k/x). We will calculate U's for both helium and nitrogen, since the vessel has a nitrogen cooled shield which if ruptured can dump nitrogen into the vacuum space.

k_{He} = 0.0871 Btu/hr ft °R at 300K
k_{N2} = 0.0149 Btu/hr ft °R at 300K

x = 0.75 in. (average insulation thickness)

U_{He} = 0.0871/(0.75/12) = 1.394 Btu/hr ft^2 °F (worst case)
U_{N2} = 0.0149/(0.75/12) = 0.238 Btu/hr ft^2 °F

$$Q_a = (52.5)(1.394)(32.9)^{0.82}$$

$$Q_a = 1284.9\ scfm_{air}$$

Case iv) System upsets – quenching

Tevatron experience shows that pressure surges do not exceed 180 psia during a full house quench at 1000 Gev. This peak pressure has a duration of 280 ms. For more information on peak quench pressures see the attached "Tevatron Quench Pressure Measurement" by J.C. Theilacker and others.

Conclusion)

This vessel is relieved by one standard FNAL Kautzky valve set to a set pressure of 30 psig and an Anderson Greenwood model 81SF1216-G relief valve with a set pressure of 240 psig. The Kautzky valve will act as the operational relief but because it is not an ASME coded relief, the Anderson Greenwood relief was incorporated to meet ASME Code rules. The Kautzky valve has been tested by an external source and is rated at 1864 $scfm_{air}$ at 150 psid. The Anderson Greenwood relief is rated at 2097 $scfm_{air}$. Both relief valves therefore have the capability to maintain vessel pressure below the vessels' MAWP for all calculated flow modes. When installed at A10, there will be the added redundancy provided by neighboring Kautzky valves in the A10 vicinity.

Summary of Calculations

Outer Main Shell: Thickness required = 0.170 inches
Thickness available = 0.197 inches → OK

Side Shell:	Thickness required = 0.103 inches Thickness available = 0.197 inches → OK
Inner Main Shell:	Calculated maximum allowable working pressure = 272 psi Actual maximum allowable working pressure = 260 psi → OK
Main Shell Flat Heads:	Thickness required = 0.841 inches Thickness available = 0.913 inches → OK
Side Shell Flat Head:	Thickness required = 0.426 inches Thickness available = 0.551 inches → OK
Side Shell Reinforcement:	Area required = 0.0608 in.^{2} Area available = 0.0943 in.^{2} → OK
1800 Amp Power Lead Reinforcement:	Area required = 0.0608 in.^{2} Area available = 0.1129 in.^{2} → OK
Kautzky Valve Port Reinforcement:	Area required = 0.1014 in.^{2} Area available = 0.1313 in.^{2} → OK
200 Amp Power Lead Reinforcement:	Area required = 0.1704 in.^{2} Area available = 0.1943 in.^{2} → OK
Correction Element Reinforcement:	Area required = 0.0649 in.^{2} Area available = 0.1313 in.^{2} → OK
Helium Return Reinforcement:	Area required = 0.0933 in.^{2} Area available = 0.1240 in.^{2} → OK
Reliefs:	Flow required for Loss of Vacuum = 211.6 $scfm_{air}$ Flow required for Fire Condition = 1284.9 $scfm_{air}$ Actual Flow available from Kautzky valve = 1864 $scfm_{air}$ → OK Actual Flow available from AGCO valve = 2097 $scfm_{air}$ → OK

Pressure Test

The pressure test for this vessel was performed at the place of manufacture, Institute for High Energy Physics in Protvino, Russia. Fermilab and ASME code rules require that a pressure vessel be pressure tested at 125% of the maximum allowable working pressure when tested pneumatically. This vessel has a MAWP of 260 psia.

Test Pressure = 1.25(260 psia) = 325 psia or (310.3 psig when the vacuum shell is not under vacuum)

Attached is a copy of the signed pressure test form from IHEP. It indicates that the vessel was tested at 362.6 psig or roughly 145% of the maximum allowable working pressure without any visible leaks.

Pressure Test Form and Helium Leak Check for TEL2 Solenoid

МИНИСТЕРСТВО
РОССИЙСКОЙ ФЕДЕРАЦИИ
ПО АТОМНОЙ ЭНЕРГИИ

MINISTRY
OF RUSSIAN FEDERATION
FOR ATOMIC ENERGY

Государственный научный центр Российской федерации
ИНСТИТУТ ФИЗИКИ ВЫСОКИХ ЭНЕРГИЙ
INSTITUTE FOR HIGH ENERGY PHYSICS

142284, г. Протвино,
Московской области
Российская Федерация

142284, Protvino
Moscow region
Russian Federation

Telex: 412657 IHEP SU. Fax: 007 0967 74-49-37

Protocol of the helium pressure vessel test.
Протокол испытаний гелиевого сосуда, работающего под давлением.

Type of Test Вид испытаний	Pneumatic Пневматические
Test Pressure (psig/bar) Давление испытаний	362.6 / 25
Maximum Allowable Working Pressure (psig/bar) Максимально возможное рабочее давление	284.2 / 19.6
Time of the Pressure Test under the Test Pressure (hour) Продолжительность испытаний при давлении испытаний	0.5
Location of Test Место проведения	Bld 12 B Здание 12 Б
Date and Time Время проведения	05.07.2004 12:00 ÷ 13:00
Special Condition or Requirements Специальные требования	Medium-Nitrogen Газ-азот
Results Выводы	О. К. годен
Signature Подписи	
Test Coordinator Тест инженер	Polkovnikov K.G. Полковников К.Г.
Department Head Начальник отдела	Kozub S.S. Козуб С.С.
Head Designer Главный конструктор	Sytnik V.V. Сытник В.В.

МИНИСТЕРСТВО
РОССИЙСКОЙ ФЕДЕРАЦИИ
ПО АТОМНОЙ ЭНЕРГИИ

MINISTRY
OF RUSSIAN FEDERATION
FOR ATOMIC ENERGY

Государственный научный центр Российской федерации
ИНСТИТУТ ФИЗИКИ ВЫСОКИХ ЭНЕРГИЙ
INSTITUTE FOR HIGH ENERGY PHYSICS

142284, г. Протвино,
Московской области
Российская Федерация

142284, Protvino
Moscow region
Russian Federation

Telex: 412657 IHEP SU. Fax: 0070967 74 49 37

Protocol of the helium leak test.
Протокол вакуумных испытаний гелиевого сосуда.

Type of Test Вид испытаний	helium leak вакуумных испытаний
Test Pressure (mbar) Давление испытаний (мбар)	10^{-3}
Leak Indicator Adjastable Sensitivity (m^3*Pa/s) Чувствительность, на которую настроен течеискатель ($м^3$*Па/с)	10^{-9}
Test method Метод испытаний	Helium chamber Гелиевой камеры
Time of the Test under the Tost Pressure (hour) Продолжительность испытаний при давлении испытаний (часов)	0.5
Location of Test Место проведения	Bld 12 B Здание 12 Б
Date and Time Время проведения	04.08.2004 08:00 ÷ 18:00
Special Condition or Requirements Специальные требования	At the Leak Indicator Adjastable Sensitivity there may be no leak rate detectable. Течеискатель, настроенный на вышеупомянутую чувствительность не должен регистрировать течь.
Results Выводы	O.K. годен
Signature Подписи	
Test Coordinator Тест инженер	Polkovnikov K.G. Полковников К.Г.

МИНИСТЕРСТВО
РОССИЙСКОЙ ФЕДЕРАЦИИ
ПО АТОМНОЙ ЭНЕРГИИ

MINISTRY
OF RUSSIAN FEDERATION
FOR ATOMIC ENERGY

Государственный научный центр Российской федерации
ИНСТИТУТ ФИЗИКИ ВЫСОКИХ ЭНЕРГИЙ
INSTITUTE FOR HIGH ENERGY PHYSICS

142284, г. Протвино,
Московской области
Российская Федерация

142284, Protvino
Moscow region
Russian Federation

Telex: 412657 IHEP SU. Fax: 0070967 74 49 37

Protocol of the vacuum vessel helium leak test.
Протокол вакуумных испытаний вакуумного сосуда.

Type of Test Вид испытаний	helium leak вакуумных испытаний
Test Pressure (mbar) Давление испытаний (мбар)	10^{-5}
Leak Indicator Adjastable Sensitivity (m^3*Pa/s) Чувствительность, на которую настроен течеискатель ($м^3$*Па/с)	10^{-9}
Test method Метод испытаний	Helium chamber Гелиевой камеры
Time of the Test under the Test Pressure (hour) Продолжительность испытаний при давлении испытаний (часов)	0.5
Location of Test Место проведения	Bld 12 B Здание 12 Б
Date and Time Время проведения	04.08.2004 08:00 - 18:00
Special Condition or Requirements Специальные требования	At the Leak Indicator Adjastable Sensitivity there may be no leak rate detectable. Течеискатель, настроенный на вышеупомянутую чувствительность не должен регистрировать течь.
Results Выводы	O.K. годен
Signature Подписи	
Test Coordinator Тест инженер	Polkovnikov K.G. Полковников К.Г.

Material Certifications for TEL2 Helium Vessel

AvestaPolarit STAINLESS

СЕРТИФИКАТ КАЧЕСТВА

INSPECTION CERTIFICATE 3.1.B
DIN EN 10204 3.1.B

666972/001 1(01)

Date Дата 09.11.01

Delivery address Адрес поставки MOSINJSTROYKOMPLEKT CONSIG.CODE 7855 /KOD OKPO:03999139 PROSPEKT MIRA 42 MOSCOW RUSSIA	STEEL TECHNOLOGIES INC. 118-21 QUEENS BLVD.STE # 612 FOREST HILLS N.Y. 11375 USA
Requirements По стандарту ASTM A240-00 ASME SA-240 2001 SEC 2	Our Order No Наш № заказа: 7112 Your order Ваш заказ: FAX 01.10.01
Product Продукция SHEET , STAINLESS STEEL	Mark of Manufacturer Марка производителя: 5 Process Процесс: AOD Inspector's stamp Печать инспектора
Grade Марка стали TYPE 304	Tolerances Допуски
Marking Маркировка 304 2B	Marks Отгрузочная маркировка

Line № п/п	Item Позиция	Charge-test No. № плавки	Size Размеры	Quantity Количество	Weight Вес	Finish Отделка
1	5	11541 1	2,0 X 1250 X 2500 MM	42	2072 KG	2B

Charge no. № плавки	Chemical composition Химический состав											
	C %	Si %	Mn %	P %	S %	Cr %	Ni %	N %				
11541	0,019	0,45	1,85	0,025	0,001	18,2	8,1	0,047				

Line № п/п	Mechanical properties Механические свойства								
	Location Место	Rp0.2 Н/мм²	Rp1.0 Н/мм²	Rm Н/мм²	A5 %	A50 %	%	Hardness Твердость HB30	
1	E	304	334	622	62	57		161	
	A	306	336	621	63	57		164	

RP0.2 YIELD STRENGTH
RP1.0 YIELD STRENGTH
RM TENSILE STRENGTH
A5 ELONGATION PROPORT.
A50 ELONGATION GL 50MM
HB30 BRINELL HARDNESS

Identity test Контроль соответствия
Sizes Размеры
Surface Поверхность
Test of intergran. corros Тест на межкристаллитную коррозию

ASTM A262 PRACTICE E : OK

A = Beginning / Начало
E = End / Конец

We certify that the above mentioned products comply with the terms of the order contract.
Мы удостоверяем, что указанная выше продукция соответствует условиям заказа.

This test certificate is made by controlled ADP-system and is valid without signature.
Данный сертификат подготовлен автоматической системой обработки данных и действителен без подписи.

AvestaPolarit Stainless Oy

Authorized inspector
Инспектор TIMO KAUPPILA

FIN-95400 Tornio, Finland
Tel +358 16 4521 Fax +358 16 452 350

AST
acciai speciali terni spa
10151 TORINO - C.so R. Margherita, 400
Tel. 011/4511.1 - Fax 011/7380431
TELEX 220337 AST-TO

CERTIFICATO DI COLLAUDO
INSPECTION CERTIFICATE
CERTIFICATE DE RECEPTION
ABNAHMEPRÜFZEUGNIS B*

EN 10204/3.1B 9602645

SPECIFICA: SPECIFICATION: ANFORDERUNGEN: DIN 17440/85 ADMW2

AZIENDA CERTIFICATA UNI EN 29002 ISO 9010

ORDINE CLIENTE N°: CUSTOMER ORDER N°: COMMANDE DU CLIENT N°: BESTELLUNG Nr: 31M4.171

ORDINE AST N°: AST ORDER N°: COMMANDE AST N°: WERKS Nr: 8E951572

AVV. DI SPEDIZ. N°: SHIPPING NOTICE N°: AVIS D'EXPEDITION N°: VERSANDANZEIGE Nr: 10070200

CLIENTE: CUSTOMER: CLIENT: BESTELLER: SILCO INOX KFT
GEPALLOMAS UT.5
3078 RATONYTERENYE
UNGHERIA

PRODOTTO: PRODUCT: PRODUIT: PRUFGEGENSTAND: STAINLESS STEEL PLATES FROM COIL

N° ROTOLO COIL N° N° BOBINE BAND Nr.	N° COLATA HEAT N° N° COULÉE SCHMELZE Nr.	COMPOSIZIONE CHIMICA - CHEMICAL COMPOSITION - COMPOSITION CHIMIQUE - CHEMISCHE ZUSAMMENSETZUNG												
		% C	% Mn	% Si	% P	% S	% Cr	% Ni	% Mo	% N	% Ti	% Cu	%	%
201612	0440610	.041	1.51	.47	.030	.001	18.10	8.55	.25	.044		.700		

TIPO D'ACCIAIO: STEEL TYPE: TYPE D'ACIER: MARKENBEZEICHNUNG: AST 304D 1.4301

TIMBRO DEL PRODUTTORE: PRODUCER TRADE MARK: MARQUE DU PRODUCTEUR: ZEICHEN DES LIEFERWERKS: AST

TIMBRO DEL RESPONSABILE INCARICATO: INSPECTOR STAMP: MARQUE DU RESPONSABLE CHARGE: STEMPEL DES WERKSSACHVERSTÄNDIGEN:

TRATT. TERMICO - RICOTTURA DI SOLUBILIZZ.: 1050 ARIA - ACQUA NEBULIZZATA - ACQUA
HEAT TRATMENT - ANNEALING: AIR - WATER SPRAY - WATER COOLING
TRAITEMENT - THERMIQUE - HYPERTREMPE: AIR - EAU ATOMISEE - EAU
WÄRMEBEHANDLUNG - ABSCHRECKEN: °C/LUFT - SPRÜHWASSER - WASSER

PROCESSO DI ELABORAZIONE: E + AOD + CC
STEELMAKING PROCESS
PROCEDE D'ELABORATION
ERSCHMELZUNGSART

IL MATERIALE È RESISTENTE ALLA CORROSIONE INTERGRANULARE SECONDO: DIN 50914
THE MATERIAL IS RESISTANT TO INTERCRYSTALLINE CORROSION IN DACCORDANCE WITH:
LE MATERIEL EST RESISTANT A LA CORROSION INTERGRANULAIR SELON:
DIE OBENGENANNTE SCHMELZE IST BESTÄNDIG GEGEN INTERKRISTALLINE KORROSION GEMÄSS:

RISULTATI DELLE PROVE / TEST RESULTS / RESULTATS DES ESSAIS / ERGEBNIS DER PRÜFUNGEN (1 N/mm² = 1 M Pa)

N° COLLO PACKAGE N° N° COLIS KISTEN Nr.	N° ROTOLO COIL N° N° BOBINE BAND Nr.	DIMENSIONI DIMENSIONS ABMESSUNGEN (mm)	N° PEZZI PIECES N° N° PIECES STÜCKZAHL	FINITURA FINISH FINITION AUSFÜHRG	PESO WEIGHT POIDS GEWICHT Kg.	PRELIEVO (1)	SENSO (2)	TRAZIONE / TENSILE / TRACTION - ZUGVERSUCH Rp 0.2% N/mm²	Rp 1% N/mm²	Rm N/mm²	A % Lo = 2"	Lo = 80	Lo = A5	DUREZZA HARDNESS DURETE HARTE HR	H	PIEGA BEND PLIAGE FALTVERSUCH ∞ = 180°	GRANO GRAIN KORN (size)
CARATTERISTICHE RICHIESTE - REQUIRED CHARACTERISTICS - CHARACTERISTIQUES REQUISES - ANFORDERUNGEN →								≥ 195	≥ 230	500 - 700	≥	≥	≥ 40	≤	≤		
W70061	201612 /1	4.00X1500X3000	12	IIA	2550	T	T	352	390	656			52.5				
W70061						C	T	328	365	634			55.0				
W70062	201612 /2	4.00X1500X3000	12	IIA	2550	T	T	352	390	656			52.5				
W70062						C	T	328	365	634			55.0				
W70063	201612 /5	4.00X1500X3000	12	IIA	2550	T	T	352	390	656			52.5				
W70063						C	T	328	365	634			55.0				
W70064	201612 /6	4.00X1500X3000	12	IIA	2550	T	T	352	390	656			52.5				
W70064						C	T	328	365	634			55.0				
W70065	201612 /7	4.00X1500X3000	12	IIA	2550	T	T	352	390	656			52.5				
W70065						C	T	328	365	634			55.0				

Secondo accordi con il TÜV Bayern (Ottobre 1964) la firma del Technische Überwachungs Organisation può essere evitata al senel delle letters del TÜV Bayern del 19 Agosto 1969.
In accordance with TÜV Bayern (October 1964) the signature of the Technische Überwachungs Organisation can be avoided in force of the letter of the TÜV Bayern on August 19 1969.
D'accord avec TÜV / Bayern (Octobre 1964) la signature du Technische Überwachungs Organisation peut être évitée sur la base de la lettre TÜV / Bayern daté 19 / Août 1969.
Im Einvernehmen mit dem TÜV / Bayern (Oktober 1964)
Auf eine Gegenzeichnung durch die zuständige Technische Überwachungs Organisation kann auf Grund des Schreibens des TÜV Bayern vom 19-8-1969 verzichtet werden.

1) Sampling - Location - Ort
T = Testa - Top - Tête - Kopf
C = Coda - Bottom - Pied - Fuss

2) Sens - Direction - Richtung
T = Trasversale - Transverse - Traverse - Quer
L = Longitudinale - Longitudinal - Long - Längs

Certifichiamo che i prodotti sopra elencati sono conformi alle prescrizioni dell'ordine.
We certify that products listed above comply with order requirements.
Nous certifions que les produits ci-dessus énumérés sont conformes aux prescriptions de la commande
Wir bestaetigen, dass die Lieferung den Vereinbarungen der Bestellannahme entspricht.

MARCATURE: MARKING: MARQUAGE: KENNZEICHNUNG: Wnr. - Type; Heat n° - Coil N°; Thickness - Finish

TORINO 03-02-1996

Accial Speciali Terni S.p.A.
FIRMA DEL RESPONSABILE INCARICATO
INSPECTOR SIGNATURE
SIGNATURE DU RESPONSABLE CHARGE
UNTERSCHRIFT DES WERKSSACHVERSTÄNDIGEN

N 4358

Herstellerwerk: Manufacturer's works: Usine productrice: THYSSEN KRUPP NIROSTA	ABNAHMEPRUEFZEUGNIS B INSPECTION CERTIFICATE B CERTIFICAT DE RECEPTION B BESCHEINIGUNG 3.1.B NACH EN 10204	Zeugnis-Nr.: Certificate No.: N° du certificat: 0200014676 Datum: Date: Date: 16.09.2003

Besteller: Purchaser: Commettant:

Bestell-Nr.: Order-No.: Commande N°:

FINTRADE Waren-Vertrieb GmbH
Brentanostr. 4

60325 Frankfurt a.Main-Westend

Unser Auftrag Nr.: Our Order No.: Notre commande: *14584/02*

Lieferanzeige Nr.: Delivery Note No.: Avis d'expédition N°: *IS*

Zeichen d. Sachverständigen Inspector's stamp Poinçon de l'expert: QA

Erzeugnisform: Product: Produit: Blech/Sheet/Tole

Werkstoff: Quality: Nuance: NIROSTA 4541 /1. 4541

Lieferbedingungen/Terms of Delivery/Conditions de livraison: EN 10088-2 8/95

Position Item Poste	Stückzahl Quantity Nombre	Gewicht/Masse/Masse kg	Maße/Product dimensions/Dimensions du produit mm	Erschm.-Art Melt. form. Mode de fus	Schmelzen-Nr. Cast-No. Coulée N°	Los-/Bund-Nr. Lot-/Coil-No. Lot-/Rouleau-N°	Ausführung Finish Fini
1		*180*	*5,00 x 1500,00 x 3000,00*	AOD	471438	7991	3C/2B

Schmelzen-Nr. Cast-No. Coulée N°	C %	Si %	Mn %	P %	S %	Cr %	Ni %	Ti %	N %
471438	0,0410	0,4700	1,0400	0,0260	0,0010	17,0800	9,0600	0,3510	0,0130

Probe Nummer Test No. Epr. N°	Los-/Bund-Nr. Lot-/Coil-No. Lot-/Rouleau-N°	Rp0,2 N/mm²	Rp1% N/mm²	Rm N/mm²	A05 %
991 A	7991	308	335	623	54,500
991 E	7991	311	336	623	54,100

Probenlage zur Walzrichtung: QUER

Verwechslungsprüfung (Séxbrstanalyse)/Test of identity spectrum analysis)/Contrôle d'identification (analyse spectrale) i.O.

Maße - Oberfläche/Dimensions - Surface i.O.

Prüfung auf interkrist. Korros./Test of intercryst. corros./Test de corros. intercrist. EN ISO 3651-2 8/98 O.B.

Thyssen Krupp Nirosta

DIESES ZEUGNIS WURDE
VOM RECHNER ERSTELLT
WERK KREFELD, ABNAHME

WAERMEBEHANDLUNG: 1050 GRAD C/LUFT
TRAITEMENT TERMIQUE: 1050 GRAD C/AIR
HEAT-TREATMENT: 1050 DEGREE/AIR

Mit dem Hersteller abgestimmte Änderungen sind gem. Umstempelvereinbarung Nr. V22-1 kursiv gedruckt.
Umstempelberechtigter

MÜLLERS

Zeichen des Sachverständigen:

NSC2

Sheffield

KBR

QCM. Hans Pernäng

Acc to EN 10204-3.1.B

Date - Datum	Load - Ladung - Chargem No	Cert.No - Zeugnis No
2001-01-09	RU1A-0009	478742-EN

Your order - Ihre Bestellung - Votre commande: RCSAL001

Avesta order - Auftrag - Ordre: 008395

Invoice - Rechnung - Facture: 150635

Purchaser - Besteller - Acheteur:
113054 MOSCOW
RUSSIA

Requirements - Anforderungen - Exigences:
ASTM A 240-00
ASME SA 240 ED 98 - A99
EN 10088-2 (04.95)

Dest.

Product - Erzeugnisform - Produit:
Hot Rolled Stainless, Coil-Plate
finish 1D, cut edge

Grade - Werkstoff - Nuance:
Avesta 18-10TI
TYPE 321/1.4541

Brand mark / Herstellerzeichen / Marque du producteur: Avesta Sheffield

Inspectors stamp / Abname - Stempel / Estamp de l'expert: AJA A

Melting process / Erschmelzungsart / Procédé de fusion: E+AOD

Extent of delivery - Lieferumfang - Etendue de livre

Item Pos Poste	Pcs Anzahl Nombre	kg	Dimensions - Abmessungen - Dimensions mm			Heat No Schmelze Nr Coulée No	Lot No Los Nr Lot Nr	Test No Probe Nr Eprouvette No
3	6	2113	10.00	1500	3000	803699	— 001	

Chemical composition - Chemische Zusammensetzung - Composition chimique

	C	Si	Mn	P	S	Cr	Ni	Ti	Nb	Cu	Co	N
Heat	.045	.66	1.46	.023	.001	17.30	9.19	.37	.011	.44	.14	.014

Test results - Prüfergebnisse - Résults déssais (1N/mm 2 = 1 MPa) F = Front - Anfang - Début B = Back - Ende - Fin T = Transverse - Quer - Travers

	Test Ref Probe Ref Eprouv Ref	Temp °C	Rp 0.2 N/mm²	Rp 1.0 N/mm²	R_m N/mm²	A5 %	2" %	HB HB
Min		+20	220	250	520	40	40	
Max					720			217
	F T	+20	265	295	576	57	59	170
	B T		272	302	573	58	60	163

Corrosion acc. ASTM A 262-E, EN ISO 3651-2A: Satisfactory
Heat treatment: Material temperature 1080 cel / Quenched
Steel grade verification (spectroscopic): OK
Insp. and gauge measurement: Satisfactory

Avesta Sheffield AB (Publ)
KBR
S-774 80 AVESTA
SWEDEN
Regoffice: Stockholm Sweden

Telephone : (0)226 813 57
Telefax : (0)226 813 16
Telex no : 7030 AVESTA S
Reg no : 556001-8748
V.A.T no : SE556001874801

Test results comply with order requirements

Authorized Inspector

ISO9002 Registration FM 20032

ACERINOX,S.A.

FABRICA DEL CAMPO
DE GIBRALTAR
PALMONES (LOS BARRIOS)

TFNO. (34) -56-629300
FAX (34) -56-629311
P.O. BOX 83

11370 LOS BARRIOS (CADIZ)

TÜV CERT DIN ISO 9002 / EN 29002

Abnahmeprüfzeugnis B
Inspection Certificate B

Prüf - Nr
Inspection No. 29270 6 / 1

ACCORDING TO
NACH EN 10204 3.1.B.

"Zustimmungsschreiben des TüV Baden vom 21. Februar 1983"
Letter of approval from the TÜV Baden dated 21-2-83
"Laut Schreiben des TÜV Baden e.V. vom 26 Juni 1989 wird auf die Gegenzeichnung verzichtet."
TÜV Baden renounce to the countersignature according to their letter date 26-6-89

Besteller - Costumer OOO ASTIL KAPITAL	Auftrags Nr - our order No. SE 14279	Bestellung Nr - your Order No.
Prüfgegenstand - Article BLECH (PLATE)	Werkstoff Nr und Lieferzustand - Material No. And Condition of Delivery 1.4541 NO.1	
Werkstoff- Normbez.Standard - Grade of Material X6 CrNiTi 18-10	Werksbez - Works Grade ACX- 315	Erschmelzungsart - Steelmaking Process A = AOD Verfahren - AOD Process A
Anforderungen: Technical requirements DIN 17440 / AD W2 + TRB 100 + AD-MERKBLATT W10 EN-10029 B		Kennzeichnung -Marking Schmelzennummer - N.° of cod.
Zeichen des Lieferwerks Brand of the manufacturer	Stempel des Sachverständigen. Inspector's stamp 2727	

Pos Nr Item No.	Stückzahl Quantity	Abmessung - Dimensions mm	Schmelze Nr. Heat No.	Probe Nr. Test No
2	1	16,00 x 1.500,00 x 6.000,00	42B0	0142B0 B

Chemische Analyse - Chemical Composition

Schmelze Nr. Heat No.	C	CR	MN	NI	P	S	SI	TI					
Anforderungen Requirements	0,080	17,000 19,000	2,000	9,000 12,000	0,045	0,015	1,000	0,700					
42B0	0,027	17,147	1,701	9,167	0,028	0,001	0,480	0,374					

Mechanische Eigenschaften - Mechanical Properties Pr. Temp./T.Temp. 20 °C

Probe Nr. Test No	Prob - Lage Pos. of Test	Abmessungen des Probestabs Dim. of specimen	Rm. N/MM2	Rp 0.2 N/MM2	Rp 1.0 N/MM2	A5 %			
Anforderungen Requirements		Breite x Dicke Width x Thickness mm	500,00 730,00	205,00	240,00	35,00			
0142B0 B	C T	30,000 16,00	564,8	265,6	302,6	55,2			

Besichtigung und Masskontrolle wurden durchgeführt: O.B
Surface and dimensions controlled: O.K.
Der Werkstoff ist beständig gegen interkristalline Korrosion gemäss DIN-50914
The material is resistant to intergranular corrosion test according to DIN-50914
Spektroskopische Identitätsprüfung: O.B.
Spectrometrical Identity test: O.K.
Wärmebehandlung: Glühen bei 1050-1100 °C

Heat treatment:

und Abschrecken mit luft
cooling: With air

WERKSACHVERSTÄNDIGER
work Inspector

J. Vaquero

Zeugnis ist per EDV erstellt und ohne Unterschrift gültig gemäss E-Norm 10204

Palmones 21 MARZO 2002

ACERINOX,S.A.
FABRICA DEL CAMPO
DE GIBRALTAR
PALMONES (LOS BARRIOS)
TFNO.(34) -56-629300
FAX (34) -56 629311
P.O. BOX.83
11370 LOS BARRIOS (CADIZ)

TÜV CERT DIN ISO 9002 / EN 29002

INSPECTION CERTIFICATE
ABNAHMEPRÜFZEUGNIS

3.1.B

ACCORDING TO EN 10204
NACH

CERTIFICATE N°
PRÜF Nr 23553 2 / 1

CUSTOMER
BESTELLER

REGION SEVERNIY VILLADGE
107204 MOSCOW RUSSIA

Our order no.
Auftrags Nr KE 1135

Your order no.
Bestellung Nr

REQUIREMENTS
ANFORDERUNGEN
ASTM-A-240/99;A-480/99;ASME-SA-240/98.

GRADE
WERKSTOFF NR.
ACX 315
TP-321

FINISH
LIEFERZUSTAND
NO.1

TRADE MARK
HERSTELLERZEICHEN

INSPECTOR'S STAMP
STEMPEL DES SACHVERSTÄNDIGEN

STEELMAKING PROCESS
ERSCHMELZUNGSART
A.O.D.

CONTENT *INHALT*	COIL/BOX *BAND/KISTE*	DIMENSIONS *ABMESSUNGEN* THICKNESS *DICKE*	WIDTH *BREITE*	LENGTH *LÄNGE*	MARKS *MARKE*	QUANTITY *STÜCKZAHL*	*PROBE NR.*
XM9023	013223 HBA	25,00	1.500,00	3.000,00	1		013223

CHEMICAL ANALYSIS *CHEMISCHE ANALYSE (%)*

HEAT NO. *SCHMELZE NR*	C	CR	MN	N	NI	P	S	SI	TI
REQUIREMENTS *ANFORDERUNGEN*	0,080	17,000 / 19,000	2,000	0,100	9,000 / 12,000	0,045	0,030	0,750	0,700
32Z3	0,023	17,490	1,595	0,013	9,135	0,028	0,001	0,340	0,359

MECHANICAL PROPERTIES *MECHANISCHE EIGENSCHAFTEN*

COIL *PROBE NR*	SOLUTION TREATED	Rm. N/MM2	Rp 0.2 N/MM2	A50 %	HRB
REQUIREMENTS *ANFORDERUNGEN*		515,00	205,00	40,00	95,00
013223	CT	546,4	290,3	56,2	80,0

INTERGRANULAR CORROSION TEST
INTERKRISTALLINE KORROSION TEST

ASTM-A-262 PRACTICA E

SURFACE AND DIMENSIONAL CONTROL
BESICHTIGUNG UND MASSKONTROLLE

SATISFACTORY
Ohne Beanstandung

REMARKS *BEMERKUNGEN*

Temperatura de hipertemple entre 1050 y 1100 ° C.

WORK INSPECTOR
WERKSACHVERSTÄNDIGEN J.A. SIMON

PALMONES, 24 JULIO 2001

P.O.C-04.11.47

ACERINOX,S.A.
FABRICA DEL CAMPO
DE GIBRALTAR
PALMONES (LOS BARRIOS)
TFNO.(34) -56-629300
FAX (34) -56-629311
P.O. BOX.83
11370 LOS BARRIOS (CADIZ)

TÜV CERT DIN ISO 9002 / EN 29002

INSPECTION CERTIFICATE
ABNAHMEPRÜFZEUGNIS

3.1.B

ACCORDING TO EN 10204
NACH

CERTIFICATE N°
PRÜF Nr 22457 2 / 1

CUSTOMER
BESTELLER

REGION SEVERNIY VILLADGE
107204 MOSCOW RUSSIA

Our order no.
Auftrags Nr KE 648

Your order no.
Bestellung Nr

REQUERIMENTS
ANFORDERUNGEN
ASTM-A-240/99;A-480/99;ASME-SA-240/98.

GRADE
WERKSTOFF NR.
ACX 315 ✓
TP-321

FINISH
LIEFERZUSTAND
NO.1

TRADE MARK
HERSTELLERZEICHEN

INSPECTOR'S STAMP
STEMPEL DES SACHVERSTÄNDIGEN

STEELMAKING PROCESS
ERSCHMELZUNGSART
A.O.D.

CONTENT *INHALT*	COIL/BOX *BAND/KISTE*	DIMENSIONS *ABMESSUNGEN* THICKNESS *DICKE*	WIDTH *BREITE*	LENGTH *LÄNGE*	MARKS *MARKE*	QUANTITY *STÜCKZAHL*	PROBE NR.
KB5483	0405Z1 DA	40,00	1.500,00	3.000,00	35	2	0405Z1
KB5483	0405Z1 DB	40,00	1.500,00	3.000,00	35	2	0405Z1

CHEMICAL ANALYSIS *CHEMISCHE ANALYSE (%)*

HEAT NO. *SCHMELZE NR*	C	CR	MN	N	NI	P	S	SI	TI
REQUIREMENTS *ANFORDERUNGEN*	0,080	17,000 19,000	2,000	0,100	9,000 12,000	0,045	0,030	0,750	0,700
05Z1	0,024	17,302	1,642	0,015	9,106	0,034	0,001	0,410	0,339

MECHANICAL PROPERTIES *MECHANISCHE EIGENSCHAFTEN*

COIL *PROBE NR*	SIT TYPE	Rm. N/MM2	Rp 0.2 N/MM2	A50 %	HRB
REQUIREMENTS *ANFORDERUNGEN*		515,00	205,00	40,00	95,00
0405Z1	CT	553,3	306,4	53,1	90,0

INTERGRANULAR CORROSION TEST
INTERKRISTALLINE KORROSION TEST

ASTM-A-262 PRACTICA E

SURFACE AND DIMENSIONAL CONTROL
BESICHTIGUNG UND MASSKONTROLLE

SATISFACTORY
Ohne Beanstandung

REMARKS *BEMERKUNGEN*

Temperatura de hipertemple entre 1050 y 1100 ° C.

WORK INSPECTOR
WERKSACHVERSTÄNDIGEN J.A. SIMON

PALMONES, 29 MAYO 2001

P.D.C.-94.11.F47

А-7492 Москва 9576

Форма № 9а

Грузоотправитель предприятие п. я. А-7099	Грузополучатель п/я Г-4090 г. Москва	сертификат качества № Т-1789	
	Заказ Союзглавметалла № НР 830833	Госзнак	
НТД ОСТ 14-13-75 79 14-1-748-73	Вагон № 61682530	Кол-во мест	Дата 7 05 86

Наименование продукции Сталь нержавеющая

№ п. п.	Плавка	Марка	Сортность	Размеры: толщина, диаметр	Размеры: длина	Точн. проката	Единица измерен.	Кол-во отгр. прод.	Масса, кг	Вес одн. п. м.	Состоян. поставки	Обработка	Прочие свойства
1	Э 95931	08Х18Н10Т	I	ф 250	номер	обыкн.	шт	2	2000		5/0	гр.	
2													
3													
4													
5													

№ п. п.	C	Mn	Si	S	P	Cr	Ni	Cu	Mo	W	V	Ti	Al		
	ХИМИЧЕСКИЙ СОСТАВ %														
1	0.08	0.56	0.54	0.018	0.035	18.17	10.08	0.15				0.42			
2															
3					Дров. ка. контр. свойств										
4					метр	СЧК22-22	прот 513от 11/9-86								
5						мб Харакарова									

2/9-86

Остальные испытания смотр. на обратной стороне

NOV 25 1999 10:55AM P.1
PHONE NO.: 0967 21 45

ACEROS BERGARA

PERTINOX, S.A.

CERTIFICADO DE ANALISIS
INSPECTION CERTIFICATE
ABNAHMEPRÜFUNG
(DIN 50049 - 3.1.B)

NR. / NO. / NR. 416

CLIENTE/CUSTOMER/KUNDE: ACEROS BERGARA, S.A.

SU REFERENCIA/YOUR REFERENCE/IHRE ZEICHEN: 7972

MARCA DE FABRICA / MANUFACTURER'S BRAND / FABRIKMARKE: PERTINOX, S.A.

NUESTRO PEDIDO NR. / OUR ORDER NO. / UNSERE AUFTRAGSNR.: 9.801.415

SELLO INSPECTOR / INSPECTOR'S STAMP / SACHVERSTÄNDIGENSTEMPEL

ARTICULO / OBJECT / PRÜFGEGENSTAND: TUBO SOLDADO DE ACERO INOXIDABLE

MATERIAL NR. / MATERIAL NO. / WERKSTOFF NR.: TP - 304 V

NORMA FABRICACION / MANUFACTURE SPECIFICATION / HERSTELLUNGSNORM: TUBO STANDARD SIN RECOCER

TRATAMIENTO TERMICO / HEAT TREATMENT TO / WÄRMEBEHANDLUNG BIS: 1050°C

DESCRIPCION MATERIAL / DESCRIPTION OF MATERIAL TO DELIVER / LIEFERUMFANG

POS. / ITEM / POS.	CANTIDAD / QUANTITY / MENGE: UNIDADES / UNITS / STÜCKZAHL	METROS / METRES / METER	DIMENSIONES / DIMENSIONS / ABMESSUNGEN: DIAM. EXTERIOR / OUTSIDE DIAM. / AUSSENDURCHM.	ESPESOR PARED / WALL THICKN. / WANDSTÄRKE	LONGITUD / LENGTH / LÄNGE	PRUEBA NR. / TEST NO. / PROBE NR.
1		2.028,00	T RED	Ø12,00X1,00 304	mm	

COMPOSICION QUIMICA / CHEMICAL COMPOSITION / CHEMISCHE ANALYSE

COLADA NR. / HEAT NO. / SCHMELZE NR.: RR23

CERTIFICADO DE / CERTIFICATE ISSUED BY / ERZEUGNIS VON:

NR. / NO. / NR.:

C	Cr	Ni	Mn	Mo	S	Si	P	Cu	
,028	18,586	9,322	1,073		,001	,404	,028		

PROPIEDADES MECANICAS / MECHANICAL PROPERTIES / MECHANISCHE EIGENSCHAFTEN

ENSAYO NR. / TEST NO. / PROBE NR.	ANCHO / WIDTH / BREITE	Ø	ESPESOR PARED / WALL THICKN. / WANDSTÄRKE	Rp 0,2 N/mm²	Rm N/mm²	A5 Lo = 5 do %	Z %
				≥		≥	
				266	635	53	86

PRUEBA APLASTAMIENTO ANILLO / RING FLATTENING TEST / RINGFLATTENVERSUCH

PRUEBA HIDROSTATICA / HYDROSTATIC TEST / MASSERINNENDRUCKVERSUCH

RESISTENCIA A LA CORROSION INTERGRANULAR SEGUN DIN 50914 / RESISTANCE TO INTERGRANULAR CORROSION ACC. TO DIN 50914 / INTERKRISTALLINE KORROSIONSBESTÄNDIGKEIT GEMÄSS DIN 50914

ENSAYO DESTRUCTIVO / NON DESTRUCTIVE TEST / ZERSTÖRUNGSFREIE PRÜFUNG

X PRUEBA APLASTADO / FLATTENING TEST / RINGFALTVERSUCH

X PRUEBA ABOCARDADO / FLARING TEST / RINGAUFWEITVERSUCH

PRUEBA TRACCION ANILLO / RING TENSILE TEST / RINGZUGVERSUCH

X PRUEBA EDDY CURRENT / EDDY CURRENT TEST / WIRBELSTROMPRÜFUNG

PRUEBA NEUMATICA / PNEUMATIC TEST / PRESSEUNTERDRUCKVERSUCH

PRUEBA ABRIR FLANGE / FLANGE TEST / RINGÖFFNUNGSVERSUCH

EXPANSION DE ANILLO / RING EXPANSION TEST / RINGAUFWEITUNGSVERSUCH

86 DUREZA / HARDNESS TEST HRB / HÄRTETEST HRB

OBSERVACIONES / REMARKS / BEMERKUNGEN:

PERTINOX, S.A.
Sr. JOSE MELGAREJO
DPTO. CALIDAD

FECHA / DATE / DATUM:

ACEROS BERGARA

CERTIFICADO DE ANALISIS
INSPECTION CERTIFICATE
ABNAHMEPRÜFUNG
(DIN 50049 - 3.1.B)

PERTINOX, S.A.

CLIENTE / CUSTOMER / KUNDE	SU REFERENCIA / YOUR REFERENCE / IHRE ZeichenNr.
ACEROS BERGARA, S.A.	8005

MARCA DE FABRICA / MANUFACTURER'S BRAND / FABRIKMARKE		NUESTRO PEDIDO Nº / OUR ORDER NO / UNSERE AUFTRAGSNR	SELLO INSPECTOR / INSPECTOR'S STAMP / SACHVERSTÄNDIGENSTEMPEL
	PERTINOX, S.A.	9.801.074	

ARTICULO / OBJECT / PRÜFGEGENSTAND

TUBO SOLDADO DE ACERO INOXIDABLE

MATERIAL / MATERIAL / WERKSTOFF		NORMA FABRICACION / MANUFACTURE SPECIFICATION / HERSTELLUNGSNORM		TRATAMIENTO TERMICO / HEAT TREATMENT / WÄRMEBEHANDLUNG
	304		TUBO STANDARD SIN DECODER	

DESCRIPCION MATERIAL / DESCRIPTION OF MATERIAL TO DELIVER / LIEFERUMFANG

POS. ITEM POS.	CANTIDAD / QUANTITY / MENGE		DIMENSIONES / DIMENSIONS / ABMESSUNGEN				PRUEBA Nº / TEST NO. / PROBE Nr.
	UNIDADES / UNITS / STÜCKZAHL	METROS / METERS / METER	DIAM. EXTERIOR / OUTSIDE DIAM. / AUSSEN DURCHM.	ESPESOR PARED / WALL THICKN. / WANDSTÄRKE	LONGITUD / LENGTH / LÄNGE		
		2.880,00	1 REG	016,00X1,00	304	mm	

COMPOSICION QUIMICA / CHEMICAL COMPOSITION / CHEMISCHE ANALYSE

COLADA Nº / HEAT NO. / SCHMELZE	V6116	CERTIFICADO DE / CERTIFICATE ISSUED BY / WERKSZEUGNIS VOM		Nº / NO. / NR.	

C	Cr	Ni	Mn	Mo	S	Si	P	Cu	
.023	17,615	9,249	.908		.001	.407	.029		

PROPIEDADES MECANICAS / MECHANICAL PROPERTIES / MECHANISCHE EIGENSCHAFTEN

ANCHO / WIDTH / BREITE	Ø	ESPESOR PARED / WALL THICKN. / WANDSTÄRKE	Rp 0,2 N/mm²	Rm N/mm²	A Lo = 5 d %	HRB
			278	616	52	93

PRUEBA APLASTADO / FLATTENING TEST / PLATTENVERSUCH	X	PRUEBA ABOCARDADO / FLARING TEST / BÖRDELVERSUCH	
PRUEBA ABOCARDADO / FLARING TEST / BÖRDELVERSUCH	X	PRUEBA DE ANILLO / RING TENSILE TEST / RINGZUGVERSUCH	
PRUEBA TRACCION ANILLO / RING TENSILE TEST / RINGZUGVERSUCH			
PRUEBA CORRIENTE / EDDY CURRENT TEST / WIRBELSTROMPRÜFUNG		PRUEBA NEUMATICA / PNEUMATIC TEST / PNEUMATISCHE PRÜFUNG	

PRUEBA HIDRAULICA / HYDRAULIC TEST / HYDRAULISCHE PRÜFUNG		
PRUEBA ESPECIAL / SPECIAL TEST / SONDERPRÜFUNG		

FECHA / DATE / DATUM	6.10.94	

ACEROS BERGARA S.A.
CALIDAD

jaro

ISO 9002 Quality System
certified by DNV

INSPECTION CERTIFICATE

EN 10204 3.1.B

17.09.1999

62240

Outokumpu Rossija Oy
P.O. Box 280

FIN-02201 Espoo

JA-RO order/item
16278/10

Packing list/item
80022223/10

Your order
07.07.99

Marking

Product description
Longitudinally laser welded stainless steel pipe

Material
AISI 304L/304

JA-RO standard nr
ISI 304L

Technical requirements
DIN 17457 pk1
Joint factor Z=1,0

Melting process
E+AOD

Product marking
JARO batch dimension material DIN 17457 pk1 delivery condition

Extent of delivery

Item	Quantity	Dimension	Batch number	Starting material	Heat number
010	204,0 m	25X2,5	3039034	Coil AISI 304L 2)	839943

Raw material according to 1)DIN 17440 + AD-W2 2)DIN 17441 + AD-W2

Chemical composition (According to inspection certificate of steel manufacturer)

Item	C [%]	Si [%]	Mn [%]	P [%]	S [%]	Cr [%]	Ni [%]	Mo [%]	Ti [%]	N [%]	Deliv. cond.
010	0,023	0,410	1,800	0,024	0,001	18,30	9,100			0,044	Tab.6,k2

Test results (Test number ending with L=longitudinally and T=transversely)

Item	Test no.	$R_{p0,2}$ [N/mm²]	$R_{p1,0}$ [N/mm²]	R_m [N/mm²]	A_5 [%]	Technological tests	Intergranual corrosion test Heat treatment
010	Q5089L	574	655	744	41	Ring expanding test	DIN 50914 /Ok
	Q5090L	596	678	758	41	DIN 50137	1050°C/water

Item	Eddy current test	X-ray test extension	Dimensional inspection
010	SEP 1914/1925		DIN 2463 D3/T3

Comments

Identification test
Accepted

Visual inspection
Accepted

The requirements stipulated are complied with

Inspector's stamp

Jorma Näsi / Kjell Hagvik
QUALITY DEPARTMENT

Inspector

OY JA-RO AB

P.O. Box 15, FIN-68601 PIETARSAARI, Finland
Tel. +358 6 7865111, Fax +358 6 7865221
Domicile: Jakobstad, Finland. Trade register number: 134.870

AN OUTOKUMPU STAINLESS STEEL COMPANY

Strada Statale 45 bis
26010 Robecco d'Oglio (CR) - Italia
Tel. (0372) 9801 - Fax 921538
Cod. Fisc. e P. IVA IT 00883040198

Trib. Cremona 6861/36
R.E.A. Cremona 119060
E-Mail = sales.ilta@arvedi.it
Home-page = http://www.arvedi.it

Ilta: Strada Statale 45 bis
26010 Robecco d'Oglio (CR) . Tel. (0372) 9801
Gilby: Via Dante Sedini, 10
16039 Sestri Levante (GE) . Tel. (0185) 482471

SINCERT

Abnahmeprüfzeugnis

(gem. DIN 50049 - Bescheinigung über Werkstoffprüfungen - 2.1B)

Prüf-N.: 7643
TEST NR.

Test certificate

(According to DIN 50049/EN 10204 - Test certificate to 3.1B)

Besteller: ASVA OY
CUSTOMER

SUOLAKIVENKATU 10
00810 HELSINKI SF

Bestell-Nr.: 0031925
ORDER NR.

Werks-Nr.: 1999/2297
MILL'S NR.

Hersteller:
MANUFACTURER ILTA INOX

Ausführung: E (D1 W-1)
EXECUTION

Prüfgegenstand: Längsnahtgeschweisste Rohre
TEST OBJECT

Anforderungen:
ACCORDING TO STANDARD DIN 17457-85

Werkstoff-Nr.: 1.4301
MATERIAL

Werkstoff (Normenzeichnung): X5 CrNi 1810
CODE NUMBER (STANDARD DESIGNATION)

Lieferzustand: D1 W-1 -
DELIVERY CONDITION

Prüfklasse: 1
TEST CLASS

Kennzeichnung: DIN 17457
MARKING

Zeichen des Lieferwerkes: ILTA
TRADE MARK

Markenbezeichnung: 1.4301
STEEL GRADE

Stempel des Werkssachverständige:
MILL'S INSPECTOR STAMP

Erschmelzungsart: E / A.O.D.
STEEL MAKING PROCESS

M.S.

Umfang der Lieferung:
MATERIAL SPECIFICATION

Pos. Nr. Item. nr.	Stückzahl Pieces nr.	Meter Meters	Gewicht Weight	Труба. Gegenstand Object	Schmelze Heat	Probe-Nr. Specimen-nr
006	216	1896.00	3695.00	42,40x 2.00x 6000 1.4301	047475	1 - 3
006	16	96.00	184.00	42.40x 2.00x 6000 1.4301	047535	1 - 1
COD.	E667204					

ЗАО "Разгаруччи Сервис"
113191 г. Москва
4-й Рощинский проезд 19/21 офис 403
Тел. (095) 952 7406 952 7585
Факс (095) 952 1769

Ergebnis der Prüfung: Die gestellten Anforderungen sind. It. Anlage erfuellt: Geprueft

Robecco d'Oglio, den 15/07/1999
Anlagen 1) Ergebnis der Prüfungen
ENCLOSURE

ASVA HEL LY 1526725-0

Der Werkssachverständige
MILL'S INSPECTOR
Mazzolari p.i Stefano

Mod. 032M - Tecnim - Piacenza

SIDERINOX

Certificato di Collaudo
Abnahmeprüfungszeugnis
Test Certificate DIN 50049-3.1B
Certificat de Contrôle

N. 45547

SOCIETA' CARTONI

80,04100 [illegible]
11300 S MOSCOW

Ordine N° / Bestell. Nr / Order No / Commande N. : 52 23268

Data / Datum / Date / Date : 28/05/00

FATT. 2000155 1107 DATE 11/07/00

Descrizione / Bezeichnung / Description / Description	Tubi saldati in acciaio inossidabile / Nahtlosrohre Stahlerzeugnisse / Welded carbon steel pipes / Tubes soudés en acier inoxydable	Analisi eqiv. stabilizzante / Chemisch äquivalent / Verdeckungsmittel / Valeur de fusion	5X / 8X / 9X / 9X
Qualità / Werkstoff / Steel quality / Nuance	1.4301/304 V	Corrispondenza a / Entsprechend / Equivalent to / Selon	ASTM 240 / DIN 17440 / ASTM 240 / ASTM 240
Prova di pressione / Druckprüfung / Hydraulic Pressure / Contrôle de pression	1.0	Tipo di saldatura / Schweißverfahren / Welding process / Procédé de soudure	TIG / TIG / TIG / TIG
Dimensione / Abmessung / Size / Dimension	BRUSHED TUBES DIN 17457/PKI DIN 2463 D3/T3		

Pezzi / Stück / Pieces / Pièces	Quantità / Menge / Quantity / Quantité	Pertinente / Schmelzung / Cast / Coulée	Colata N° / Schmelzen Nr / Cast No / Coulée N.	Controllo non distruttivo / zerstörungsfreie Prüfung / Non destructive test / Contrôle non destructif	Controllo Dimensionale / Maßkontrolle / Dimensional Control / Contrôle dimensionnel
MS / RT / NR	150	114,3 x 2	598770	100% NACH SEF 1925/1914 OK Probe Nr. 1913	OK

Colata N° / Schmelzen Nr / Heat No / Coulée N.	C	S	Mn	P	S	Cr	Mo	Ni	Ti
598770	0,037	0,620	1,050	0,028	0,001	18,110		8,050	

Prova N° / Probe / Test / Essai	Durezza / Härte / Hardness / Dureté	Strappamento / Reißversuch / Tensile / Traction		Allungamento / Dehnung / Elongation / Allongement	Eddy Current / Wirbelstromprüfung / Eddy Current / Courant de Foucault
	HRB	N/mm²	N/mm²	%	
5270	82	307	325	253	44,7	OK

Osservazioni / Bemerkungen / Remarks / Notes

Data / Datum / Date 12/07/00

Per conforme / Für die Richtigkeit / For the Company

Piazzale Cadorna
MONDO (MI) 20123 - Italia

ОАО "ДНЕПРОСПЕЦСТАЛЬ"

СЕРТИФИКАТ N Л46303

Заказчик г.ДНЕПРОПЕТРОВСК
Получатель г.ДНЕПРОПЕТРОВСК
Заказ 00 год 1049033064

СТАЛЬ Г/КАТ.

ГОСТ заказчика 2590-88

К	Х плавки	Марка стали	Профиль	Размеры	Состояние поставки	Кол. мест	Кол. шт.	Вес брутто / Вес нетто	Химический анализ C	Si	Mn	S	P	Cr	Ni	Mo	Cu	Co	Ti
1	909023	08Х18Н10Т	КР 8	НОРМ. 1 обычн	Б/З	1	2,600		0.08	0.63	1.28	0.005	0.034	17.85	10.17	0.09	0.04	0.21	0.20	0.51
2	909023	08Х18Н10Т	КР 12	НОРМ. 1 обычн	Б/З	1	1,160		0.08	0.63	1.28	0.005	0.034	17.85	10.17	0.09	0.04	0.21	0.20	0.51
3	151827	08Х18Н10Т	КР 22	НОРМ. 1 обычн	Б/З	1	1,620		0.058	0.79	1.20	0.004	0.022	18.05	10.09	0.08	0.05	0.20	0.27	0.47
4	151827	08Х18Н10Т	КР 30	НОРМ. 1 обычн	Б/З	1	2,500		0.058	0.79	1.20	0.004	0.022	18.05	10.09	0.08	0.05	0.20	0.27	0.47

К	Механические свойства: Предел текуч.	Предел прочн.	Относ. удлин.	Относ. сужен.	Ударн. вязкость	НВ	Твердость объемная	Макроструктура (балл): ЕК	СК	ЖК	ОСК	КСК	ВТ	ЗН	РТ	Волос	Неметаллические включения: ЕС	ЕТ	СТ	СО	СН	S	РС	ЕТ	Обезуглер.	Крупн. зерно	Строчк.	Контрольная НВ	ЕК

Material Certifications for TEL2 Vacuum Vessel

/ Болгов /

/ Розов /

Программа 1,6-12,17-26гн СТАЛЬ. О ГОСТ.НЕРЖАВ. ГАЗАР 2-5. по СТАНД. ГОСТ 24.003(ЛИСТ.)

ст 08.04.02

11 5098).

РЕГ размеры 2500-98,8500-08 пп.6-12,17-18

№ п/п	Марка стали	Марка стали	Размер	Длина, м	Сб. Плав.	Сб.ст.пост.	Марка	Вид	Масса	Химический анализ %												
										C	Si	Mn	S	P	Cr	Ni	W	Mo	Cu	Ti	Al	Nb
1	[illegible]	[illegible]	КР 115.000	Н/Д 3,00 -5,00	1	Объект	Б/О	1 8	2,960 2,940	0.073	0.46	1.27	0.006	0.035	16.9	12.27	0.1	0.04	2.4	0.19	0.43	
2	[illegible]	[illegible]	ВК 24.000	Н/Д	1	НП	НЭ70Р	1	3,160 3,150	0.09	0.48	1.35	0.01	0.035	17.75	10.1	0.14	0.04	0.23	0.21	0.58	
3	[illegible]	[illegible]	ВК 27.000	Н/Д	1	"	НЭ70Р	1	3,557 3,542	0.09	0.48	1.32	0.01	0.035	17.75	10.1	0.14	0.04	0.23	0.21	0.58	
4	[illegible]	[illegible]	ВК 19.000	Н/Д	1	"	НЭ70Р	1	4,489 4,479	0.08	0.43	1.21	0.014	0.034	18	9.98	0.1	0.04	0.24	0.2	0.58	
5	[illegible]	[illegible]	ВК 17.000	Н/Д	1	"	НЭ70Р	1	2,[illegible]3 2,670	0.09	0.56	1.28	0.02	0.03	17.74	10.26	0.1	0.04	0.25	0.16	0.47	
6	[illegible]	[illegible]	КР 100.000	Н/Д 4,00 -6,00	1	Объект	ЭМ70Л	1 3	2,[illegible] 2,940	0,07	0,55	1,33	0,011	0,034	17,40	10,53	0,09	0,04	0,23	0,19	0,66	
7	[illegible]	[illegible]	КР 180.000	Н/Д 4,00 -6,00	1	Объект	ЭМ70Л	1 3	2,910 2,900						ТОТ ЖЕ							
8	[illegible]	[illegible]	КР 180.000	Н/Д 4,00 -6,00	1	Объект	ЭМ70Л	1 2	1,830 1,820						ТОТ ЖЕ							
9	[illegible]	[illegible]	КР 180.000	Н/Д 4,00 -6,00	1	Объект	ЭМ70Л	1 1	0,950 0,930						ТОТ ЖЕ							
10	[illegible]	[illegible]	КР 60.000	Н/Д 3,00 -5,00	1	Объект	ЭМ70Л	1 29	2,550 2,530	0.1	0.63	1.13	0.008	0.035	17.85	10.45	0.08	0.06	0.23	0.21	0.69	
11	[illegible]	[illegible]	КР 180.000	Н/Д 4,00 -6,00	1	Объект	ЭМ70Л	1 4	3,490 3,470	0.1	0.63	1.13	0.008	0.035	17.85	10.45	0.08	0.06	0.23	0.21	0.69	
12	[illegible]	[illegible]	КР 180.000	Н/Д 4,00 -6,00	1	Объект	ЭМ70Л	1 5	4,410 4,400	0.1	0.63	1.13	0.008	0.035	17.85	10.45	0.08	0.06	0.23	0.21	0.69	
13	[illegible]	[illegible]	ВК 22.000	Н/Д	1	НП	НЭ70Р	1	3,1[illegible] 3,1[illegible]	0.09	0.52	1.4	0.004	0.035	17.23	10.3	0.09	0.04	0.35	0.22	0.56	
14	[illegible]	[illegible]	ВК 22.000	Н/Д	1	"	НЭ70Р	1	0,3[illegible] 0,300	0.09	0.52	1.4	0.004	0.035	17.23	10.3	0.09	0.04	0.35	0.22	0.56	
15	[illegible]	[illegible]	ВК 40.000	Н/Д	1	"	НЭ70Р	1	3,01[illegible] 3,000	0.09	0.52	1.4	0.004	0.035	17.23	10.3	0.09	0.04	0.35	0.22	0.56	
16	[illegible]	[illegible]	ВК 40.000	Н/Д	1	"	НЭ70Р	1	0,1[illegible] 0,150	0.09	0.52	1.4	0.004	0.035	17.23	10.3	0.09	0.04	0.35	0.22	0.56	
17	[illegible]	[illegible]	КР 40.000	Н/Д 4,00	1	Объект	ЭМ70Л	1	0,340 0,330	0.08	0.46	1.4	0.002	0.035	17.6	10.2	0.12	0.05	0.26	0.23	0.47	
18	[illegible]	[illegible]	КР 40.000	Н/Д 4,00	1	Объект	ЭМ70Л	1	1,740 1,730	0.08	0.46	1.4	0.002	0.035	17.6	10.2	0.12	0.05	0.26	0.23	0.47	
19	[illegible]	[illegible]	КР 25.000	Н/КОР 4,10	1	Объект	ЭМ70Л	1	2,000 1,990	0.06	0.37	1.21	0.013	0.035	17	10.43	0.08	0.05	0.2	0.18	0.49	
20	911018	[illegible]	КР 40.000	Н/Д 3,00 -5,00	1	Объект	Б/О	1 54	3,720 3,700	0.06	69	1.24	0.007	0.035	17.75	10.11	0.14	0.04	0.29	0.2	0.6	
21	911022	[illegible]	КР 180.000	Н/Д 3,00 -5,00	1	Объект	Б/О	1 2	2,220 2,210	0.064	0.65	1.29	0.007	0.035	17.61	10.23	0.09	0.04	0.3	0.2	0.41	
22	911022	[illegible]	КР 180.000	Н/Д 3,00 -5,00	1	Объект	Б/О	1 2	2,290 2,280	0.064	0.65	1.29	0.007	0.035	17.61	10.23	0.09	0.04	0.3	0.2	0.41	
23	911022	[illegible]	КР 180.000	Н/Д 3,00 -5,00	1	Объект	Б/О	1 2	2,320 2,310	0.064	0.65	1.29	0.007	0.035	17.61	10.23	0.09	0.04	0.3	0.2	0.41	
24	911022	[illegible]	КР 180.000	Н/Д 3,00 -5,00	1	Объект	Б/О	1 3	3,430 3,420	0.064	0.65	1.29	0.007	0.035	17.61	10.23	0.09	0.04	0.3	0.2	0.41	
25	911022	[illegible]	КР 180.000	Н/Д 3,00 -5,00	1	Объект	Б/О	1 3	3,490 3,490	0.064	0.65	1.29	0.007	0.035	17.61	10.23	0.09	0.04	0.3	0.2	0.41	

16.09

1 ч 54

OUTOKUMPU POLARIT OY

СЕРТИФИКАТ КАЧЕСТВА

INSPECTION CERTIFICATE 3.1.B
DIN EN 10204 3.1.B

631215/001 1 (01)
Date Дата 03.11.00

Delivery address Адрес поставки MOSINJSTROYKOMPLEKT CONSIGNEE CODE 7855 PROSPEKT MIRA 42 MOSCOW RUSSIA	OUTOKUMPU ROSSIJA OY P.O. BOX 280 02201 ESPOO SUOMI-FINLAND
Requirements По стандарту ASTM A240-99B ASME SA-240 ED-99+A99	Our Order No. Наш № заказа: 94462 Your order Ваш заказ: FAX 29.05.00
Product Продукция SHEET , STAINLESS STEEL	Mark of Manufacturer Марка производителя: Ω Process Процесс: AOD Inspector's stamp Печать инспектора
Grade Марка стали TYPE 304	Tolerances Допуски
Marking Маркировка POLARIT 725 304 2B	Marks Отгрузочная маркировка ASTIL KAPITAL

Line № п/п	Item Позиция	Charge-test No. № плавки	Size Размеры	Quantity Количество	Weight Вес	Finish Отделка
1	5	03299 4	1,0 X 1250 X 2500 MM	406	10210 KG	2B

Charge no. № плавки	Chemical composition Химический состав							
	C %	Si %	Mn %	P %	S %	Cr %	Ni %	N %
03299	0,05	0,54	1,69	0,027	0,001	18,2	8,2	0,039

Line № п/п	Mechanical properties Механические свойства							
	Location Место	Rp0.2 Н/мм²	Rp1.0 Н/мм²	Rm Н/мм²	A5 %	A50 %	%	Hardness Твердость HB30
1	E	293	320	622	73	62		162
	A	308	334	631	68	60		160

RP0.2 YIELD STRENGTH
RP1.0 YIELD STRENGTH
RM TENSILE STRENGTH
A5 ELONGATION PROPORT.
A50 ELONGATION GL 50MM
HB30 BRINELL HARDNESS

Identity test Контроль соответствия
Sizes Размеры
Surface Поверхность
Test of intergran. corros Тест на межкристаллитную коррозию
ASTM A262 PRACTICE E : OK

A = Beginning / Начало
E = End / Конец

We certify that the above mentioned products comply with the terms of the order contract.
Мы удостоверяем, что указанная выше продукция соответствует условиям заказа.

This test certificate is made by controlled ADP-system and is valid without signature.
Данный сертификат подготовлен автоматической системой обработки данных и действителен без подписи.

OUTOKUMPU POLARIT OY

Authorized inspector
Инспектор TIMO KAUPPILA

FIN-95400 Tornio, Finland
Tel. +358 16 4521 Fax +358 16 452 350
STAINLESS STEEL BUSINESS AREA

ACERINOX,S.A.

FABRICA DEL CAMPO
DE GIBRALTAR
PALMONES (LOS BARRIOS)

TFNO. (34) -56-629300
FAX . (34) -56-629311
P.O. BOX.83

11370 LOS BARRIOS (CADIZ)

TÜV CERT DIN ISO 9002 / EN 29002

Abnahmeprüfzeugnis B
Inspection Certificate B

Prüf - Nr
Inspection No. 1250 13 / 1

ACCORDING TO
NACH EN 10204 3.1.B.

"Zustimmungsschreiben des TüV Baden vom 21. Februar 1983"
Letter of approval from the TÜV Baden dated 21-2-83
"Laut Schreiben des TÜV Baden e.V. vom 26 Juni 1989 wird auf die Gegenzeichnung verzichtet."
TÜV Baden renounce to the countersignature according to their letter date 26-6-89

Besteller - Costumer OOO ASTIL KAPITAL	Auftrags Nr - our order No. KE 92	Bestellung Nr - your Order No.
Prüfgegenstand - Article BLECH (PLATE)	Werkstoff Nr und Lieferzustand - Material No. And Condition of Delivery 1.4541 / NO.1	
Werkstoff- Normbez.Standard - Grade of Material X6 CrNiTi 18-10	Werkstoez - Works Grade ACX- 315	Erschmelzungsart - Steelmaking Process A = AOD Verfahren - AOD Process A
Anforderungen: Technical requirements DIN 17440 / TRB 100 / AD-2000-MERKBLATT W2/W10 EN-10029 B		Kennzeichnung -Marking Schmelzennummer - N.° of coil.
Zeichen des Lieferwerks Brand of the manufacturer	Stempel des Sachverständigen. Inspector's stamp 2727	

Pos Nr Item No.	Stückzahl Quantity	Abmessung - Dimensions mm	Schmelze Nr. Heat No.	Probe Nr. Test No.
14	1	30,00 x 1.500,00 x 3.000,00	69B7	0269B7
15	2	30,00 x 1.500,00 x 3.000,00	69B7	0369B7

Chemische Analyse - Chemical Composition

Schmelze Nr. Heat No.	C	CR	MN	NI	P	S	SI	TI						
Anforderungen Requirements	0,080	17,000 19,000	2,000	9,000 12,000	0,045	0,015	1,000	0,700						
69B7	0,029	17,449	1,630	9,181	0,031	0,001	0,527	0,344						

Mechanische Eigenschaften - Mechanical Properties Pr. Temp./T.Temp. 20 °C

Probe Nr. Test No	Prob.- Lage Pos. of Test	Abmessungen des Probestabs Dim. of specimen Breite x Dicke Width x Thickness mm	Rm. N/MM2	Rp 0.2 N/MM2	Rp 1.0 N/MM2	A5 %	ISO-V VALOR 1	ISO-V VALOR 2	ISO-V VALOR 3
Anforderungen Requirements			500,00 730,00	205,00	240,00	35,00	55,00	55,00	55,00
0269B7	C T	40,000 30,00	557,2	273,1	302,3	58,6	255,0	250,0	250,0
0369B7	C T	40,000 30,00	561,4	273,0	303,1	56,9	240,0	225,0	245,0

Besichtigung und Masskontrolle wurden durchgeführt: O.B
Surface and dimensions controlled: O.K.
Der Werkstoff ist beständig gegen interkristalline Korrosion gemäss DIN-50914
The material is resistant to intergranular corrosion test according to DIN-50914
Spektroskopische Identitätsprüfung: O.B.
Spectrometrical Identity test: O.K.
Wärmebehandlung: Glühen bei 1050-1100 °C

Heat treatment:

und Abschrecken mit luft

cooling: With air

WERKSACHVERSTÄNDIGER
work Inspector

J. Vaquero

Zeugnis ist per EDV erstellt und ohne Unterschrift gültig gemäss E-Norm 10204

Palmones 29 MAYO 2002

ACERINOX,S.A.
FABRICA DEL CAMPO
DE GIBRALTAR
PALMONES (LOS BARRIOS)
TFNO.(34) -56-629300
FAX (34) -56-629311
P.O. BOX.83
11370 LOS BARRIOS (CADIZ)

TÜV CERT DIN ISO 9002 / EN 29002

INSPECTION CERTIFICATE
ABNAHMEPRÜFZEUGNIS

3.1.B

ACCORDING TO EN 10204
NACH

CERTIFICATE N°
PRÜF Nr 754 1 / 1

CUSTOMER
BESTELLER

OOO ASTIL KAPITAL
Ugreshkaya baza kompektas
MOSCOW RUSSIA

Our order no.
Auftrags Nr SE 466

Your order no.
Bestellung Nr

REQUERIMENTS
ANFORDERUNGEN

GRADE
WERKSTOFF NR.
ACX 315
Aisi 321

FINISH
LIEFERZUSTAND
NO.1

TRADE MARK
HERSTELLERZEICHEN

INSPECTOR'S STAMP
STEMPEL DES SACHVERSTÄNDIGEN

STEELMAKING PROCESS
ERSCHMELZUNGSART
A.O.D.

CONTENT *INHALT*	COIL/BOX *BAND/KISTE*	DIMENSIONS *ABMESSUNGEN* THICKNESS *DICKE*	WIDTH *BREITE*	LENGTH *LÄNGE*	MARKS *MARKE*	QUANTITY *STÜCKZAHL*	*PROBE NR.*
KR3897	0220V1 BC	50,00	1.500,00	3.000,00	1	1	0220V1

CHEMICAL ANALYSIS *CHEMISCHE ANALYSE (%)*

HEAT NO. *SCHMELZE NR*	C	CR	MN	NI	P	S	SI	TI
REQUIREMENTS *ANFORDERUNGEN*	0,080	17,000 19,000	2,000	9,000 12,000	0,045	0,030	1,000	0,800
20V1	0,030	17,193	1,719	9,107	0,031	0,001	0,504	0,363

MECHANICAL PROPERTIES *MECHANISCHE EIGENSCHAFTEN*

COIL *PROBE NR*	FORM SIT TYPE	Rm. N/MM2	Rp 0.2 N/MM2	A50 %	HRB
REQUIREMENTS *ANFORDERUNGEN*					
0220V1	CT	547,2	254,2	58,0	86,0

INTERGRANULAR CORROSION TEST
INTERKRISTALLINE KORROSION TEST

REMARKS *BEMERKUNGEN*

SURFACE AND DIMENSIONAL CONTROL
BESICHTIGUNG UND MASSKONTROLLE

SATISFACTORY
Ohne Beanstandung

WORK INSPECTOR
WERKSACHVERSTÄNDIGEN J.A. SIMON

PALMONES, 8 MAYO 2002

P.D.C.-94.11.F47

PERTINOX, S.A.

CERTIFICADO DE ANALISIS
INSPECTION CERTIFICATE
ABNAHMEPRÜFUNG
(UNE EN 10204 - 3.1.B)

TÜV

NR. NO. NR. 4.081

CLIENTE / CUSTOMER / KUNDE: ACEROS BERGARA, S.A.

SU REFERENCIA / YOUR REFERENCE / IHRE BEZ.: 23993

MARCA DE FABRICA / MANUFACTURERS BRAND / FABRIKZEICHEN: PERTINOX, S.A.

NUESTRO PEDIDO Nº / OUR ORDER NO. / UNSERE AUFTRAGSNR.: 9.901.740

SELLO INSPECTOR / INSPECTOR'S STAMP / SACHVERSTÄNDIGEN STEMPEL

ARTICULO / OBJECT / PRÜFGEGENSTAND: TUBO SOLDADO DE ACERO INOXIDABLE

MATERIAL / MATERIAL / WERKSTOFF-NR.: TP - 304

FORMA FABRICACION / MANUFACTURE SPECIFICATION / HERSTELLUNGSFORM:

TIPO STANDARD / STANDARD / NORM:

PLATINES TO UNE EN 10088 / HEAT TREATED TO 10088 / WARMEBEHANDELT BIS 10088

DESCRIPCION MATERIAL / DESCRIPTION OF MATERIAL TO DELIVER / LIEFERUMFANG

POS. / ITEM / POS.	CANTIDAD / QUANTITY / MENGE: UNIDADES / UNITS / STÜCKZAHL	METROS / METRES / METER	DIMENSIONES / DIMENSIONS / ABMESSUNGEN: DIAM. EXTERIOR / OUTSIDE DIAM. / AUSSEN DURCHM.	ESPESOR PARED / WALL THICKN. / WANDSTÄRKE	LONGITUD / LENGTH / LÄNGE	PRUEBA Nº / TEST NO. / PROBE NR.
1		1.000	1" SCH	065 MIN. 08 MM	6.000 GIR	

COMPOSICION QUIMICA / CHEMICAL COMPOSITION / CHEMISCHE ANALYSE

COLADA Nº / HEAT NO. / SCHMELZENR.	CERTIFICADO DE CERTIFICATE ISSUED BY / WERKSZEUGNIS VON	FABRICANTE / MANUFACTURER / HERSTELLER	NR. / NO. / NR.
1M94			

C	Si	Mn	Mo	S	Bi	P	Ti
.020	15.300	8.699	1.765	.001	.001	.027	

PROPIEDADES MECANICAS / MECHANICAL PROPERTIES / MECHANISCHE EIGENSCHAFTEN

PROBETA Nº / TEST NO. / PROBE NR.	Ø	Rp 0,2 Nmm²	Rm Nmm²	A %	HB
5			≥ 318	560 ≥ 35	

X PRUEBA APLASTADO / FLATTENING TEST / BIEGEPRÜFUNG

X PRUEBA ABOCINADO / FLARING TEST / BIEGEPRÜFUNG

X PRUEBA APLASTADO / FLARE TEST / BIEGEPRÜFUNG

X PRUEBA ABOCINADO / FLARING TEST / BIEGEPRÜFUNG

PRUEBA MICRONATICA / MICROSTRUCTURE TEST / GEFÜGEPRÜFUNG

RESISTENCIA A LA CORROSION INTERGRANULAR SEGUN DIN 50914 / RESISTANCE TO INTERGRANULAR CORROSION ACCORDING TO DIN 50914 / BESTÄNDIGKEIT GEMÄSS DIN 50914

PRUEBA TRASCHIAMIENTO / RING TENSILE TEST / RINGZUGPRÜFUNG

PRUEBA DE ESTRUCTURA / MICROSTRUCTURE TEST / GEFÜGEPRÜFUNG

PRUEBA EDDY CURRENT / EDDY CURRENT TEST / WIRBELSTROMPRÜFUNG

PRUEBA HIDRAULICA / HYDRAULIC TEST / DRUCKPRÜFUNG

HB HARDNESS TEST / HARTEPRÜFUNG

OBSERVACIONES / REMARKS / BEMERKUNGEN:

PERTINOX, S.A.
DPTO. CALIDAD

FECHA / DATE / DATUM: 24/10/95

jaro

ISO 9002 Quality System
certified by DNV

INSPECTION CERTIFICATE
EN 10204 3.1.B

19.11.1999

Outokumpu Rossija Oy
P.O. Box 280

FIN-02201 ESPOO

JA-RO order/item
14822/10

Packing list/item
80020307/10

Your order
07.07.99

Marking

Product description
Longitudinally welded stainless steel pipe

Material
W 1.4436

JA-F
41.

Technical requirements
DIN 17457 pk1
Joint factor Z = 1,0

Molt
E+.

Product marking
JARO batch dimension material

Extent of delivery

Item	Quantity	Dimension	Batch number	Starting material	Heat
010	1.020,0 m	30X2,0	3042906	Coil SS2343-28/316L	914

Chemical composition (According to inspection certificate of steel manufacturer)

Item	C [%]	Si [%]	Mn [%]	P [%]	S [%]	Cr [%]	Ni [%]	Mo [%]	Ti [%]	N_2 [%]
010	0,029	0,550	1,690	0,030	0,007	16,70	10,60	2,580		0,044

Test results (Test number ending with L = longitudinally and T = transversely)

Item	Test no.	$R_{p0.2}$ [N/mm²]	$R_{p1.0}$ [N/mm²]	R_m [N/mm²]	A_5 [%]	Technological tests	Intergranual corrosion Heat treatment
010	Q9901L	257	293	589	61	Ring expanding test	DIN 50914
	Q9902L	300	338	599	59	DIN 50137	1050°C/water

Item	Eddy current test	X-ray test extension	Dimensional Inspectior
010	SEP 1914/1925		DIN 2463 D3/T3

Comments

Identification test
Accepted

Visual inspectl
Accepted

The requirements stipulated are complied with

Insp
stam

Jorma Näsi / Kjell Hegvik
QUALITY DEPARTMENT

JA-RO AB

QUALITY DEPARTMENT

Inspector

jaro

ISO 9002 Quality System
certified by DNV

INSPECTION CERTIFICATE
EN 10204 3.1.B

13.09.1999

61530

Outokumpu Rossija Oy
P.O. Box 280

FIN-02201 Espoo

JA-RO order/item
15239/10

Your order
15.7.1999

Marking

Packing list/item
80022128/10

Product description
Longitudinally welded stainless steel pipe

Technical requirements
SS 219711
Joint factor Z=1,0 Inspecta SER693a/97

Material
SS 2333-23 /304

JA-RO standard nr
41.01.01

Melting process
E+AOD

Product marking
JARO batch dimension quality-23 (corresponding material) ASS NR Z=1,0

Extent of delivery

Item	Quantity	Dimension	Batch number	Starting material	Heat number
010	480,0 m	57X3,5	3032140	Coil SS 2333-28	837253
020	108,0 m	57X3,5	3021011	Coil SS 2333-28	814751

Chemical composition (According to inspection certificate of steel manufacturer)

Item	C [%]	Si [%]	Mn [%]	P [%]	S [%]	Cr [%]	Ni [%]	Mo [%]	Ti [%]	N_2 [%]	Deliv. cond.
010	0,046	0,490	1,560	0,031	0,002	18,20	8,600				
020	0,047	0,430	1,480	0,028	0,002	18,10	8,500				

Test results (Test number ending with L=longitudinally and T=transversely)

Item	Test no.	$R_{p0.2}$ [N/mm²]	$R_{p1.0}$ [N/mm²]	R_m [N/mm²]	A_5 [%]	Technological tests	Intergranual corrosion test Heat treatment
010	Q0455L	291	329	602	66	Ring expanding test	SS 117105
	Q0456L	285	322	601	66	SS 112645	1050°C/water
020	P4991L	460	535	682	51	Ring expanding test	SS 117105
	P4992L	429	499	668	54	SS 112645	1050°C/water

Item	Eddy current test	X-ray test extension	Dimensional inspection
010	SS 114305/E2 int.+ext. notch 20% surr. trans.		DIN 2463 D3/T3
020	SS 114305/E2 int.+ext. notch 20% surr. trans.		DIN 2463 D3/T3

Comments

Identification test
Accepted

Visual inspection
Accepted

The requirements stipulated are complied with

Inspector's stamp

Jorma Näsi / Kjell Hagvik
QUALITY DEPARTMENT

Inspector

OY JA-RO AB

P.O. Box 15, FIN-68601 PIETARSAARI, Finland
Tel. +358 6 7865111, Fax +358 6 7865221
Domicile: Jakobstad, Finland. Trade register number: 134.870

AN OUTOKUMPU STAINLESS STEEL COMPANY

MARCEGAGLIA S.p.A.

CERTIFICATO DI COLLAUDO

Abnahmeprüfzeugnis DIN 50049 3.1B

Test certificate EN 10204 3.1B

Certificat de contrôle

NR. 2487/94

DIN 11850

OMOLOGAZIONI ACQUAP
DA N° 2084 A N° 2101
DA N° 8010/8 A N° 8031/8

RINA QUACER ISO 9002

HASTEUK S. A.
N° PEDIDO 22857
N.º ALBARAN 22857
Nº ITEM
FECHA

jaro

ISO 9002 Quality System
certified by DNV

INSPECTION CERTIFICATE

EN 10204 3.1.B

05.03.1999

41130

Outokumpu Rossija Oy
P.O. Box 280

FIN-02201 Espoo

JA-RO order/item
11341/20

Delivery/Item
80015261/20

Your order
02.03.1999

Marking

Product description
Longitudinally welded stainless steel pipe

Material
SS 2333-23/304

JA-RO standard nr
42.01.01

Technical requirements
SS 219711
Joint factor Z=1,0 Inspecta SER693a/97

Melting process
E+AOD

Product marking
JARO batch dimension quality-23 (corresponding material) ASS NR Z=1,0

Extent of delivery

Item	Quantity	Dimension	Batch number	Starting material	Heat number
010	880,3 m	76,1X3,6	3018199	Coil SS 2333-28	758196

Chemical composition (According to inspection certificate of steel manufacturer)

Item	C [%]	Si [%]	Mn [%]	P [%]	S [%]	Cr [%]	Ni [%]	Mo [%]	Ti [%]	N_2 [%]	Deliv. cond.
010	0,037	0,430	1,490	0,029	0,009	18,10	8,600				

Test results (Test number ending with L=longitudinally and T=transversely)

Item	Test no.	$R_{p0.2}$ [N/mm²]	$R_{p1.0}$ [N/mm²]	R_m [N/mm²]	A_5 [%]	Technological tests	Intergranual corrosion test Heat treatment
010	P3261L	427	481	674	52	Ring expanding test	SS 117105
	P3262L	424	481	672	52	SS 112645	

Item	Eddy current test	X-ray test extension	Dimensional inspection
010	SS 114305/E2 int.+ext. notch 20% surr. trans.		DIN 2463 D3/T3

Comments

Identification test
Accepted

Visual inspection
Accepted

The requirements stipulated are complied with

Inspector's stamp

Jorma Näsi / Kjell Hagvik
QUALITY DEPARTMENT

Inspector

AN OUTOKUMPU STAINLESS STEEL

OY JA-RO AB

P.O. Box 15, FIN-68601 PIETARSAARI, Finland
Tel. +358 6 7865111. Fax +358 6 7865221

Сертификат качества № [illegible]

Получатель: [illegible]

Наименование продукции: [illegible]

Марка	Номера партий	Номера плавок	Размеры труб (в мм) диаметр	толщина стенки	длина	Количество шт	м	кг	№№ сертификатов	Химические свойства σв	σт	δ %	ψ %	Ударная вязкость	Твердость
08Х18Н	687	I527I2	89	5		4	30	3030		58 58		45 45			
08Х18Н	687	I527I2	89	5		2	13	I030		58 58		45 45			
08Х18Н	687	I527I2	89	5		4	31	3070		58 58		45 45			
08Х18Н	687	I527I2 I5292I	89	5		2	26	I940		58 58		45 45			
08Х18Н	687	I527I2	89	5			15	470		58 58		45 45			
			Всего:			I6	95	I0140							
08Х18Г	688	I5272I	I08	5		I	31	I030		58 58		50 50			
08Х18Г	688	I5272I	I08	5		I	32	II80		58 58		50 50			
08Х18Г	688	I5272I	I08	5			18	220		58 58		50 50			
			Всего:			2	81	2430							
			И Т О Г О :			22	I86	I2870							

Итого: восемь пакетов
Сто двадцать две штуки
Одна тысяча сто восемьдесят шесть метров
Двенадцать тонн восемьсот семьдесят килограмм

Химический состав стали соответствует

Сертификат продукции соответствует действующим ГОСТам и техническим условиям

Претензии по вопросам качества принимаются на 30 сертификата

Начальник отдела технического контроля

5632

ХИЖ код 3880

ОО-"НПТЗ"

ОСТ, ТУ 994ВI об.т.

г. Днепропетровск

ООО ПКП "ЮВИС"

Грузополучатель

Заказ Союзглавтрубснабсбыта № ДМЕТ I00391

Вагон № а/м 80-05 ДНН

Дата выдачи сертификата

71411

Фо41-1 7I4II

Сертификат качества № Т 13

Наименование продукции ТРУБЫ БЕСШОВНЫЕ ГОРЯЧЕДЕФОРМИРОВАННЫЕ ИЗ КОРРОЗИОННОСТОЙКИ СТ

Марка	Номера партии	Номера плавок	Размеры труб (в мм) диаметр	толщина стенки	длина	Количество шт.	м	масса, кг	Механические свойства №№ обр.	бв кг. с/мм²	бт кг. с/мм²	б₅ %	ф %	Ак кг. с/мм²	НВ
0ХI8НI0Т	69	I5272I	I08	5		26	I40	I840		59 60		48 45			
0ХI8НI0Т	68	I5272I	I08	5		26	I43	I830		56		5I			
0ХI8НI0Т	68	I5272I	I08	5		I0	39	500		58 56 58		50 5I 50			
0ХI8НI0Т	68	I5272I	I08	5		30	I67	2I50		56 58		5I 50			
				Всего:		92	489	6320							

Отгружено: чыре пакета.
Дяносто две штуки.
Чнриста восемьдесят девять метров.
Шть тонн триста двадцать килограмм.

Указанная в сертифик продукция соответствует действующим в СССР стандартам и техническим условиям.

При переписке по вопросам качества ссылайтесь на № сертификата.

Химический состав стали соответствует ГОСТу 6032-72

Начальник отдела

ИИ

Грузополучатель [illegible]

СЕРТИФИКАТ КАЧЕСТВА № [illegible]

Цирка Союзглавтрубснабсбыта № 39 [illegible]

Вагон № 2066 1834

Дата выдачи сертификата [illegible]

Наименование продукции [illegible]

Марка	Номера партий	Номера плавок	Размеры труб (в мм) диаметр	толщина стенки	длина	Количество т	м	малых тт	Механические свойства №№ обр	$\sigma_в$ кг/мм²	$\sigma_т$ кг/мм²	δ_5 %	δ_{10} %	A_k кгсм/см²	HB
20Гл	5834		150	15		9	224			66 66		38 47			

Термообработана

[illegible]

[illegible] 224
22.01.91

Химический состав стали соответствует ГОСТу [illegible]

[illegible] сортаменты и отклонения соответствуют действующим в СССР стандартам и техническим условиям.

[illegible] качества соответствуют данным № сертификата.

Начальник отдела технического контроля [illegible]

Tubos Inoxidables, S.A.

MILL TEST CERTIFICATE

EN 10204 3.1 B

RAW MATERIAL

PRODUCT

HEAT TREATMENT

MARKS

Relief Valve Information

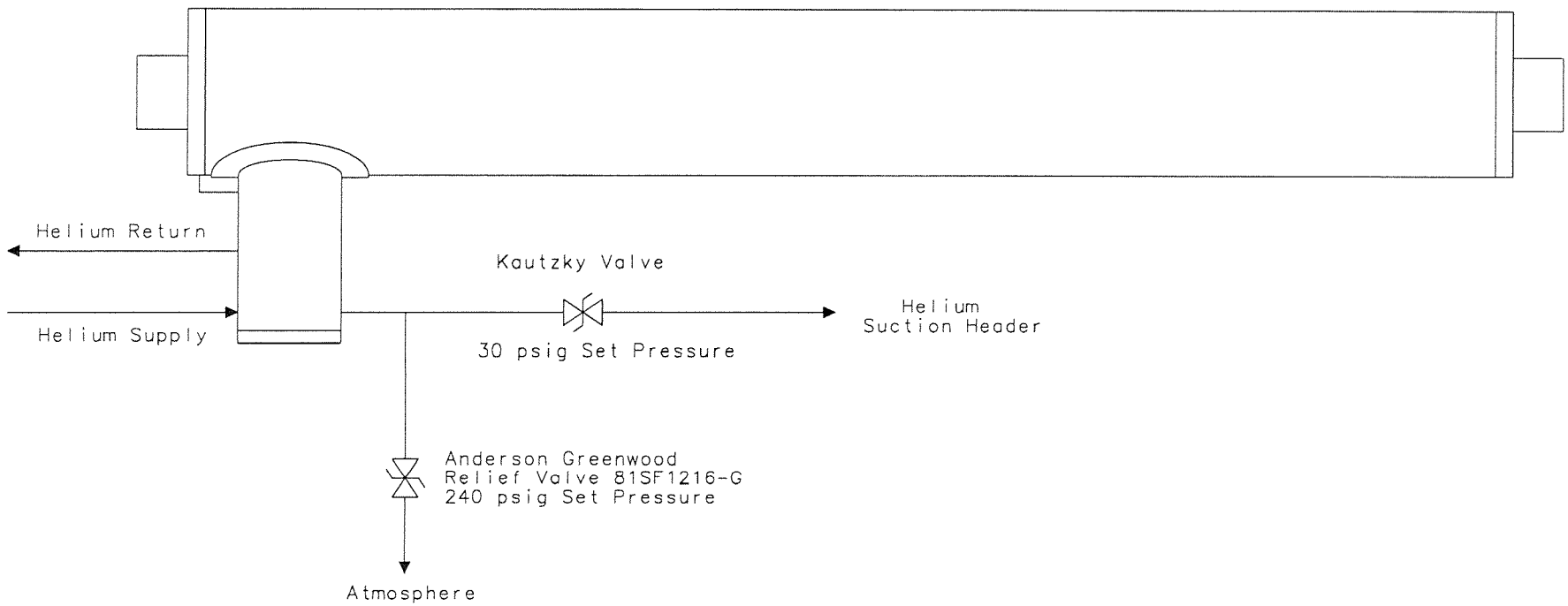

Plotted by martinez on 23-Aug-2000 , File: New_Bypass_0057.pff

The National Board of Boiler and Pressure Vessel Inspectors

S. F. HARRISON, Executive Director

BOARD OF TRUSTEES

T. GROSLEY, Chairman
Little Rock, Arkansas

B. L. WHITLEY, 1st Vice Chm.
Raleigh, North Carolina

R. K. BLOSCH, 2nd Vice Chm.
Salt Lake City, Utah

1055 CHAMPER AVENUE
COLUMBUS, OHIO 43228 U.S.A.
PHONE 614-888-8330
TELEX 245 625

J. J. DUFFY
State of Wisconsin

W. A. MILLER WEST
Province of Prince Edward Island

C. H. WALTERS
State of Oregon

D. R. GALLUP, Past Chairman
Springfield, Illinois

1919 63rd 1982
ANNIVERSARY

September 20, 1982

Fermi National
Accelerator Laboratory
Mr. Tom Peterson
P. O. Box 500
Batavia IL 60510

SUBJECT: Experimental Testing

Dear Mr. Peterson:

On September 1, 1982, tests were conducted at the National Board Testing Laboratory for the purpose of obtaining experimental flow information for an Energy Doubler-Relief Valve. This test was conducted with air as the test medium. Enclosed is a copy of the test results, reported as test number 7991A.

This flow test was conducted at 150 psig and a coefficient of discharge of .925 was determined, using a discharge area of .668 sq. inches. We hope this information will be of value to you in your work.

Yours truly,

S. F. Harrison, Jr.
Director, Safety Valve Department

JFB/cm

Enclosure

Model Number Selection for Type 81 –G Orifice

Gas	Valve Model	G	Valve Size Inlet x Outlet	Orifice Area	
	81		1 1/2" x 2"	in² - 0.503	cm² - 3.25

Valve Size Inlet x Outlet	Valve Body Material	Valve Inlet			Valve Outlet	Old Valve Model Number	Current Valve Model Number
		Max. Set Pressure[1]		Connection Type[2]	Connection Type[2]		
		psig	barg				
1 1/2" x 2"	Carbon Steel	285	19.6	150	150	8105G152	81CS12A16A-G
	Stainless Steel	275	19.0	150	150	8105G152/S	81SS12A16A-G
	Carbon Steel	740	51.1	300	150	8110G152	81CS12B16A-G
	Stainless Steel	720	49.7	300	150	8110G152/S	81SS12B16A-G
	Carbon Steel	1,480	102.1	600	150	8112G152	81CS12C16A-G
	Stainless Steel	1,440	99.3	600	150	8112G152/S	81SS12C16A-G
	Carbon Steel	2,220	153.3	900	150	8114G152	81CS12D16A-G
	Stainless Steel	2,160	148.9	900	150	8114G152/S	81SS12D16A-G
	Carbon Steel	2,570	177.2	1500	150	8116G152	81CS12E16A-G
	Stainless Steel	2,570	177.2	1500	150	8116G152/S	81SS12E16A-G
	Carbon Steel	2,570	177.2	FNPT[3]	FNPT[3]	81C1216-G	81CF1216-G
	Stainless Steel	2,570	177.2	FNPT[3]	FNPT[3]	81S1216-G	81SF1216-G
	Brass	2,570	177.2	FNPT[3]	FNPT[3]	81B1216-G	81BF1216-G

[1] Normal minimum set pressure for Type 81 is 50 psig (3.4 barg); maximums as listed herein are valid for standard material at 100°F (38°C). Factory selection is usually made for seat material. Also see seat material pressure rating table on page 16 for additional details.

[2] All flanges are ANSI standard unless otherwise specified. Other flange standards such as DIN or ISO PN are also available on special request.

[3] Threaded connection: FNPT (Female National Pipe Thread).

Note: The Type 81 is not balanced against back pressure; therefore, the maximum recommended built-up back pressure should not exceed 10% of set pressure, per industry practice for conventional valves.

Types 81 and 83 Capacities - SCFM Air - National Board Certified
60°F, Z = 1.00; 10% Overpressure or 3 psi (whichever is greater)

Set pressure psig	– 4 0.049 in² (0.32 cm²)	– 6 0.110 in² (0.71 cm²)	– 8 0.196 in² (1.26 cm²)	F 0.307 in² (1.98 cm²)	G 0.503 in² (3.25 cm²)	H 0.785 in² (5.06 cm²)	J 1.287 in² (8.30 cm²)
20	28	62	111	173	284	443	726
40	43	97	172	270	442	689	1130
60	59	133	237	371	607	948	1554
80	75	169	301	472	773	1206	1997
100	91	205	366	573	938	1464	2401
120	108	241	430	674	1104	1723	2824
140	124	278	495	775	1269	1981	3248
160	140	314	559	876	1435	2239	3671
180	156	350	624	977	1600	2498	4095
200	172	386	688	1078	1766	2756	4518
240	204	459	817	1280	2097	3273	5365
280	237	531	946	1482	2428	3789	6212
300	253	567	1011	1583	2594	4048	6636
340	285	640	1140	1785	2925	4564	7483
380	317	712	1269	1987	3256	5081	8330
400	333	748	1333	2088	3421	5339	8754
440	366	821	1462	2290	3752	5856	9601
480	398	893	1591	2492	4083	6373	10,448
500	414	929	1656	2593	4249	6631	10,871
600	495	1110	1978	3098	5076	7922	12,989
700	575	1291	2301	3603	5904	9214	15,106
800	656	1472	2623	4109	6732	10,506	17,224
900	736	1653	2946	4614	7559	11,797	19,342
1000	817	1834	3268	5119	8387	13,089	21,459
1500	1220	2739	4881	7645	12,525	19,547	32,048
2000	1623	3644	6493	10,170	16,663	26,006	—
2500	2026	4549	8106	12,696	20,802	32,464	—
3000	2430	5454	9718	15,222	—	—	—
4000	3236	7264	12,943	20,273	—	—	—
5000	4042	9074	16,168	—	—	—	—
6000	4848	10,884	19,393	—	—	—	—
7000	5655	12,694	—	—	—	—	—
8000	6461	14,504	—	—	—	—	—
9000	7267	16,314	—	—	—	—	—
10,000	8073	—	—	—	—	—	—

Metric Conversions: psig = barg x 14.5
SCFM = Nm³/hr x 1.608
°F = (°C + 17.78)1.8

Sizing

Types 81, 83, 86 and 81P Materials of Construction

Orifice Sizes F through J

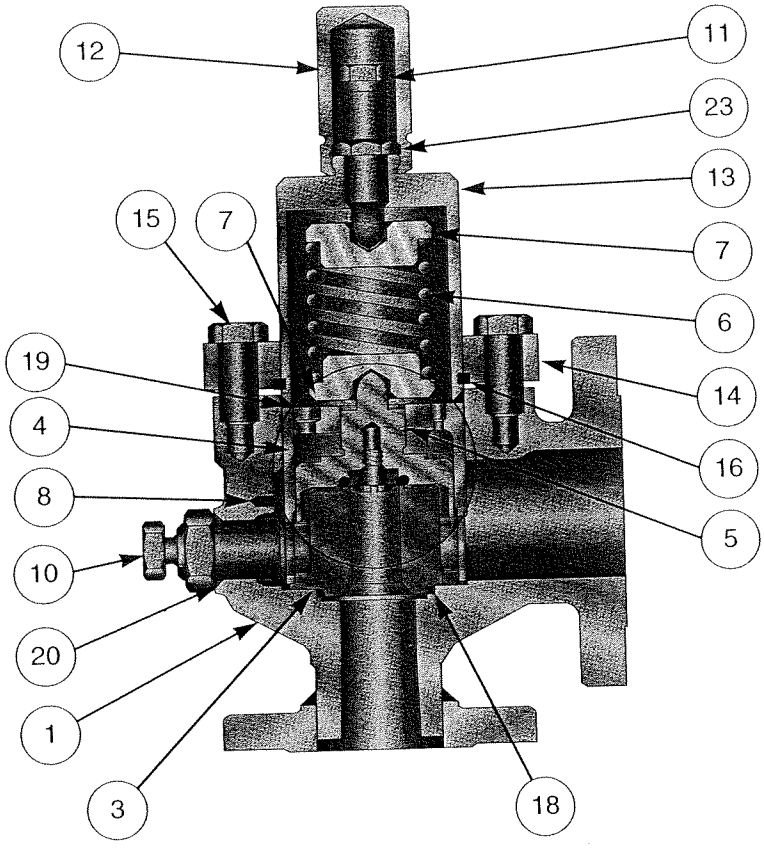

81P Seat (plastic)

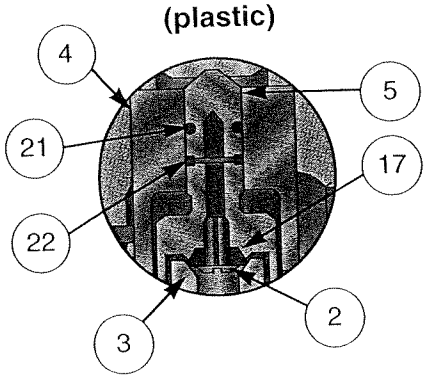

83 Seat (o-ring)

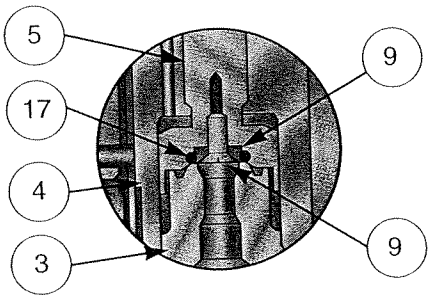

81 & 86 Seat (plastic)

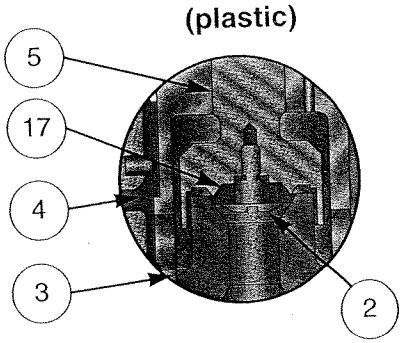

Drawings of TEL2 Solenoid

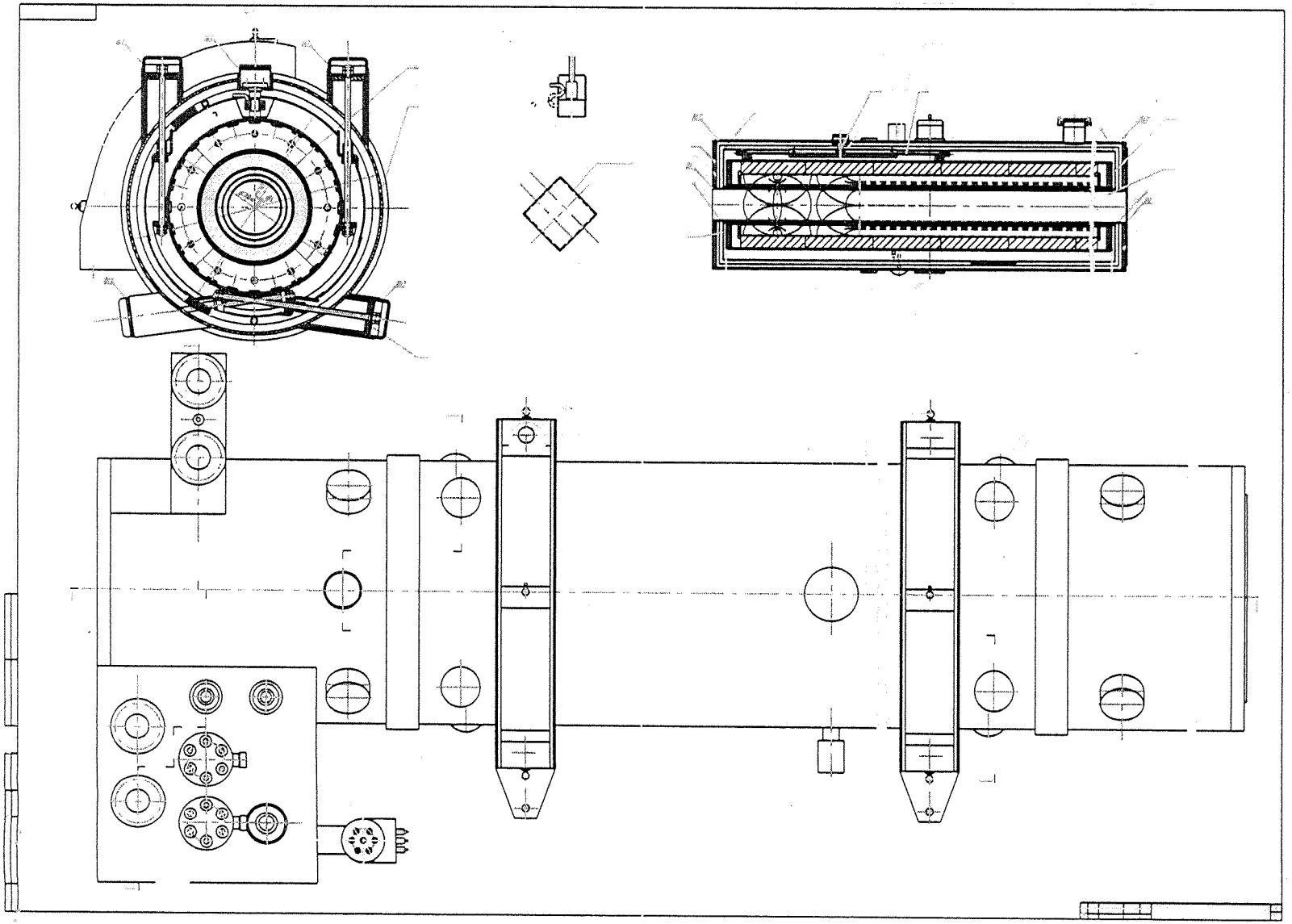

1128-01-00-00-0058-L2

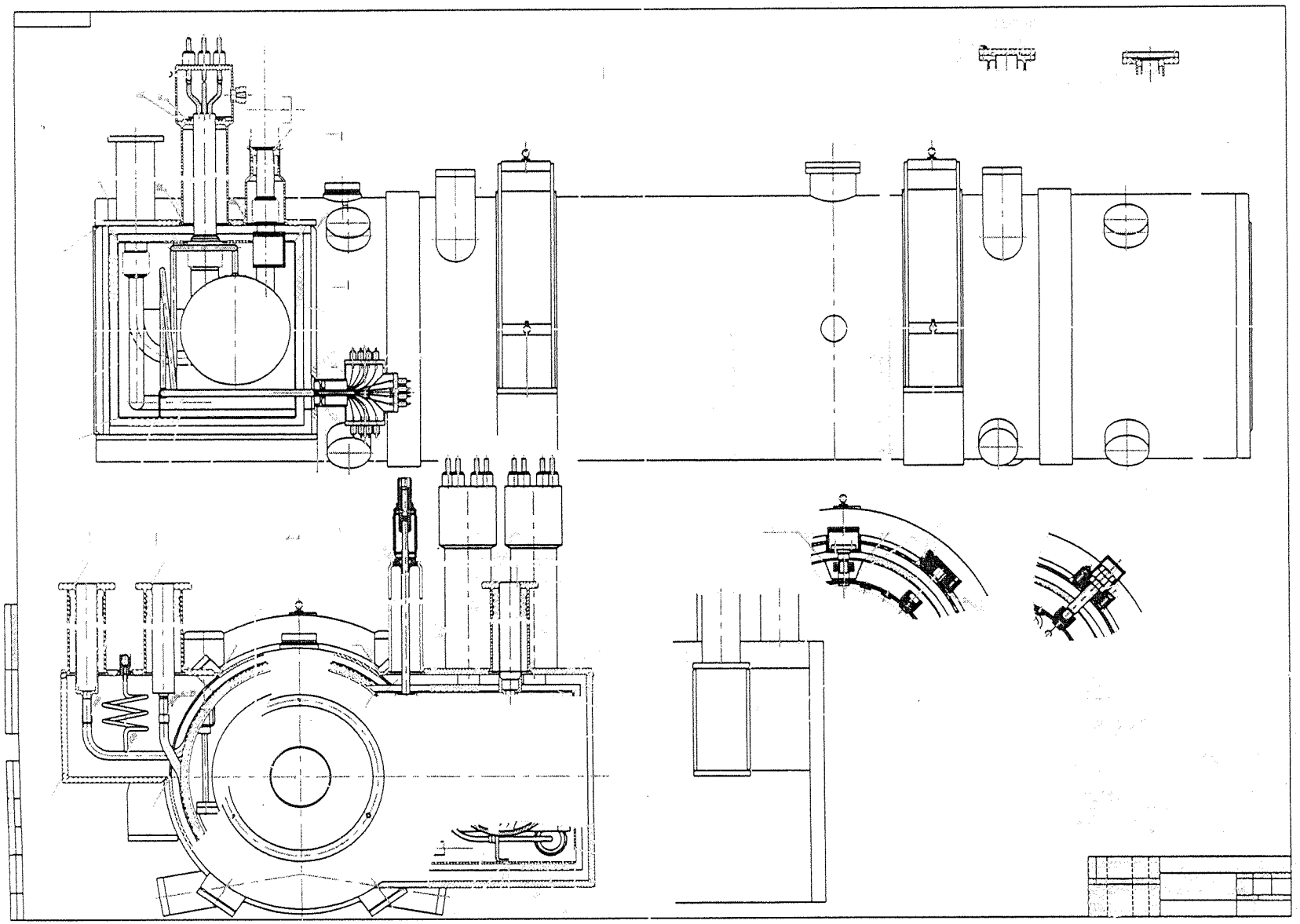

1128-01-00-00-00SB-L1

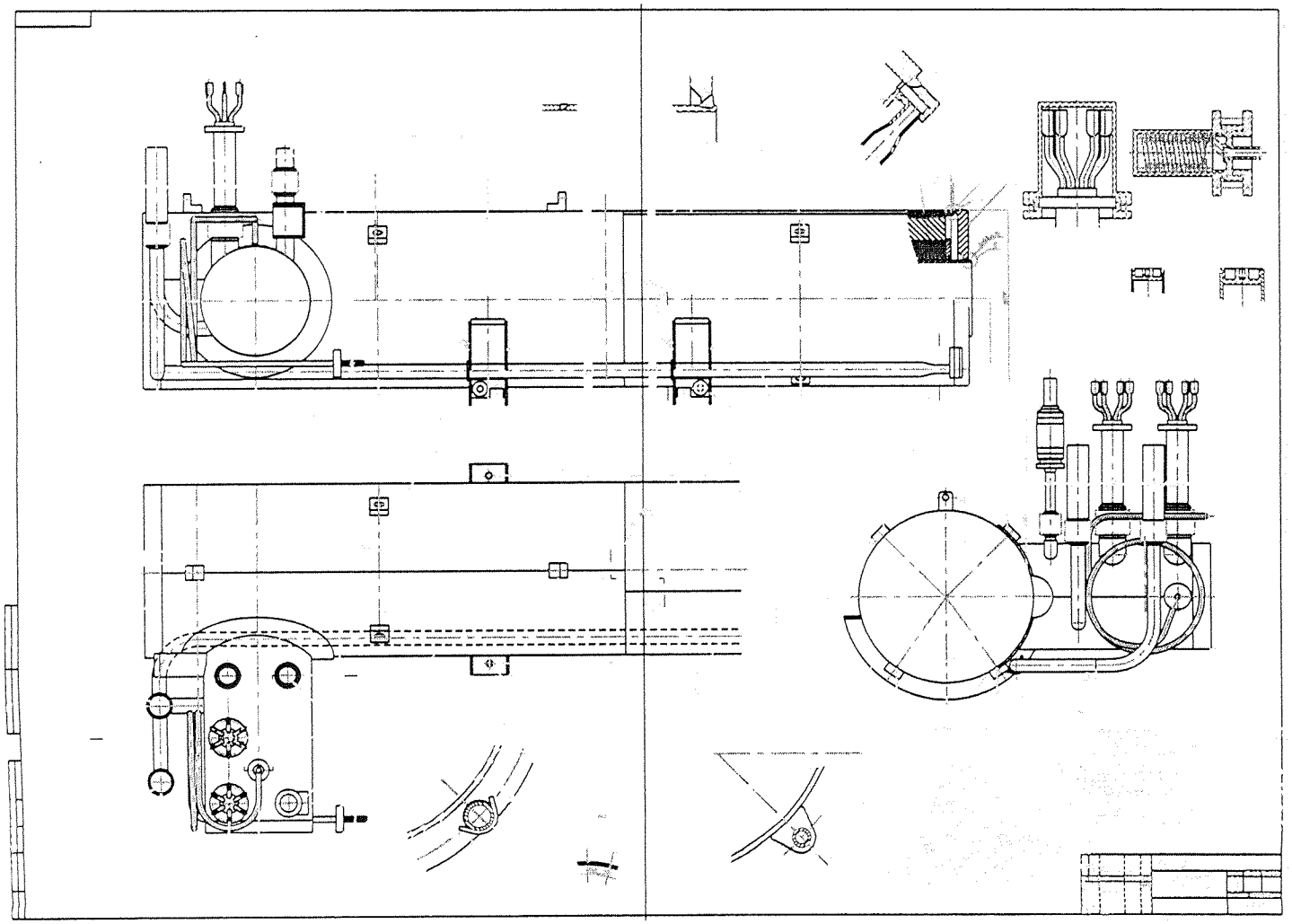

1128-01-01-00-00ASBL1

Helium Vessel

Helium Vessel

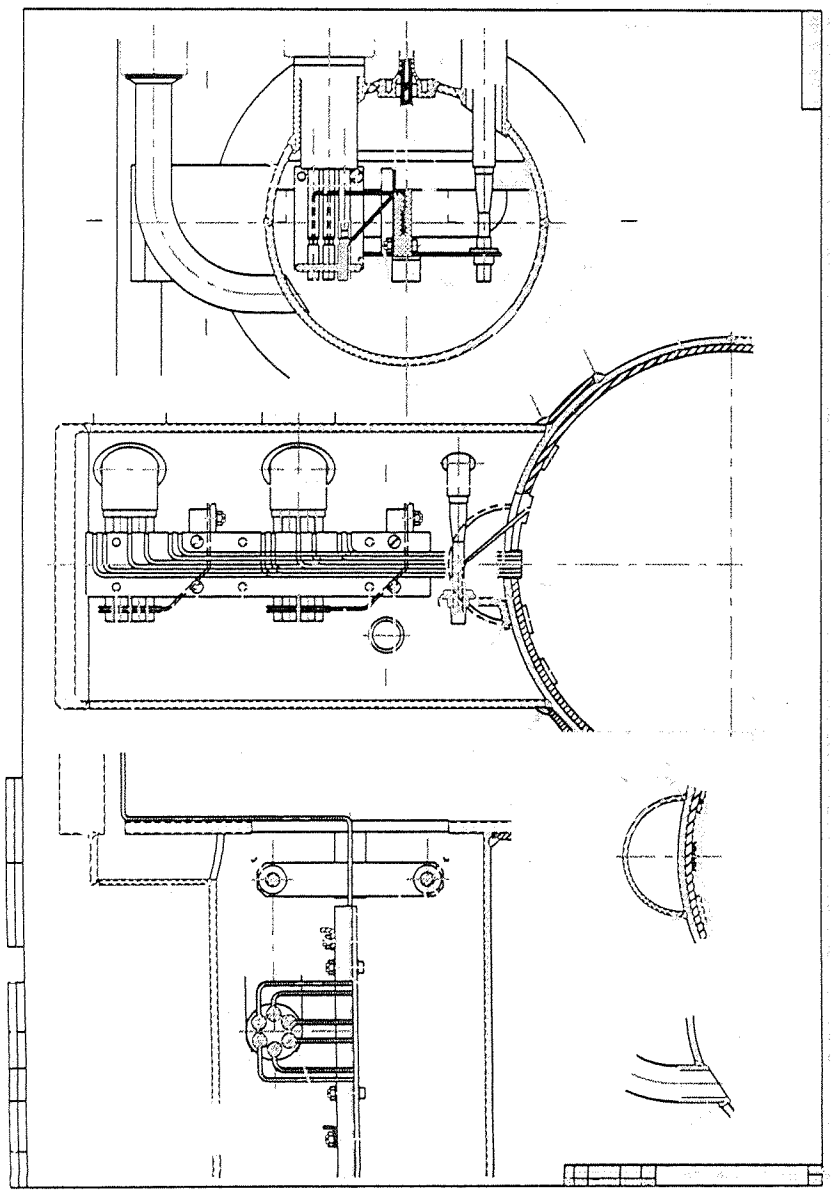

1128-01-01-00-00ASBL2

Helium Side Shell

1128-01-01-00-01

Helium vessel outer End plates

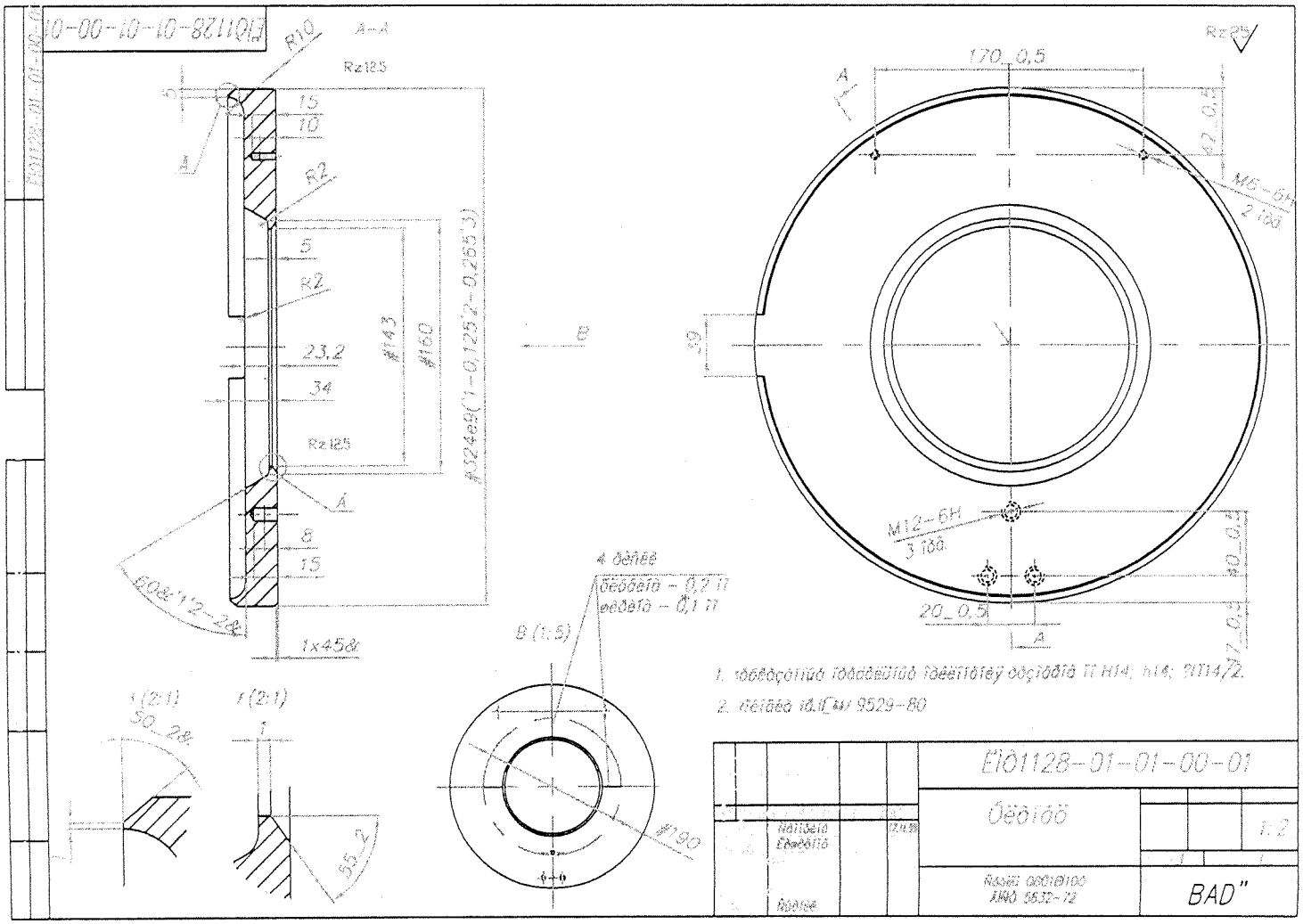

Helium vessel outer end plates

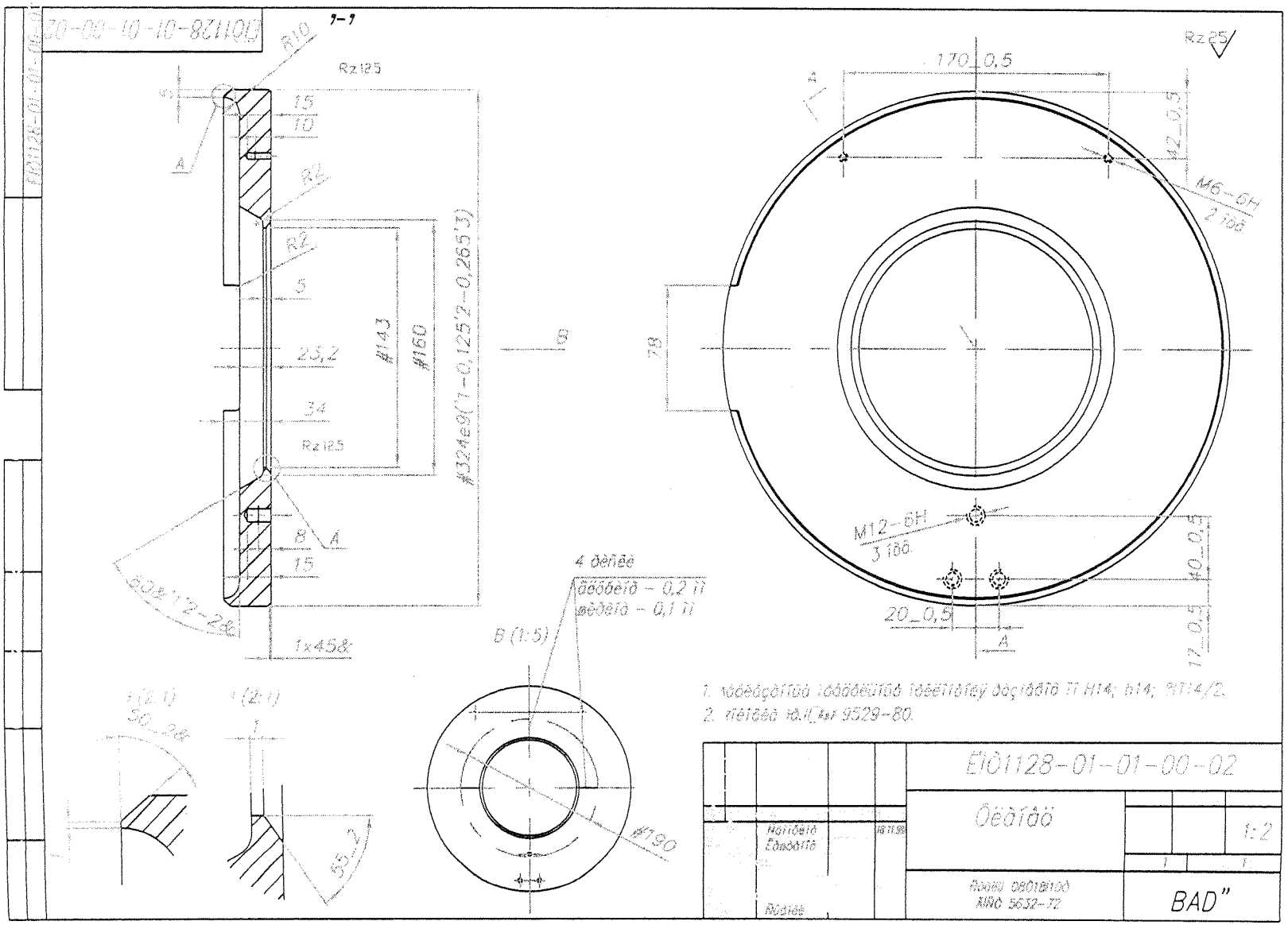

1128-01-01-00-02

Helium Vessel

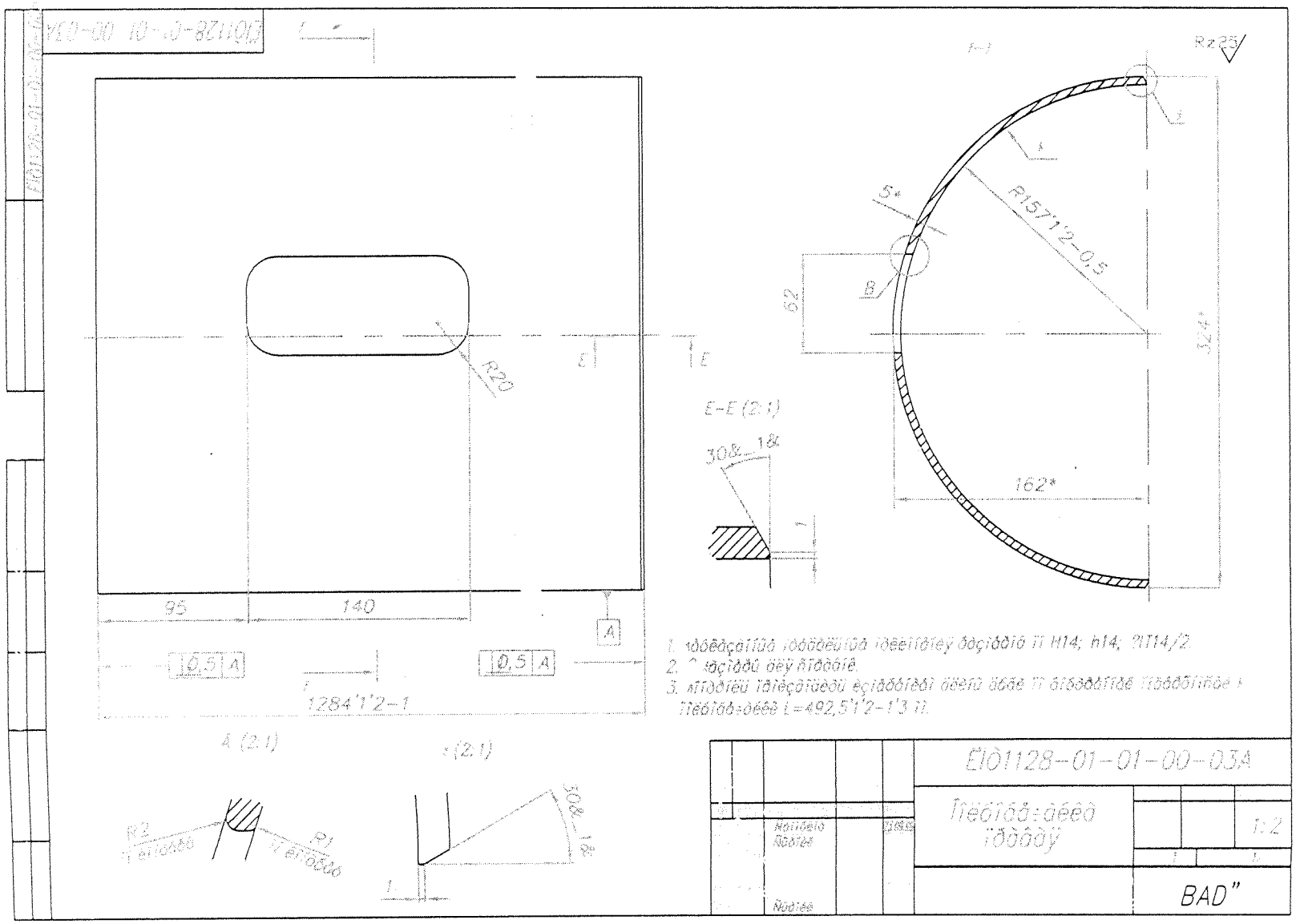

1128-01-01-00-03A
Outer Main Shell

Helium Vessel

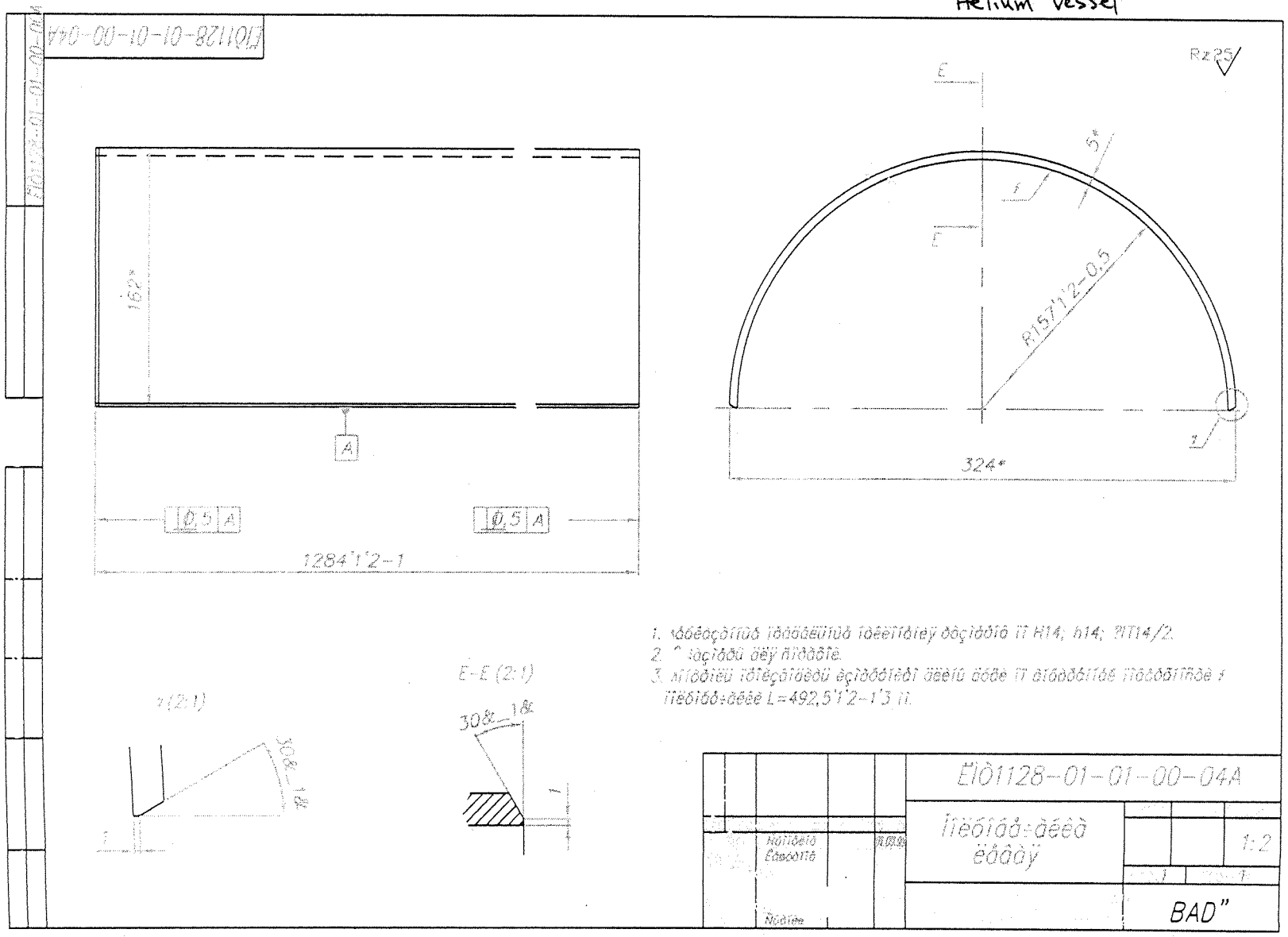

H128-01-01-00-04A
Outer Main Shell

Helium Vessel

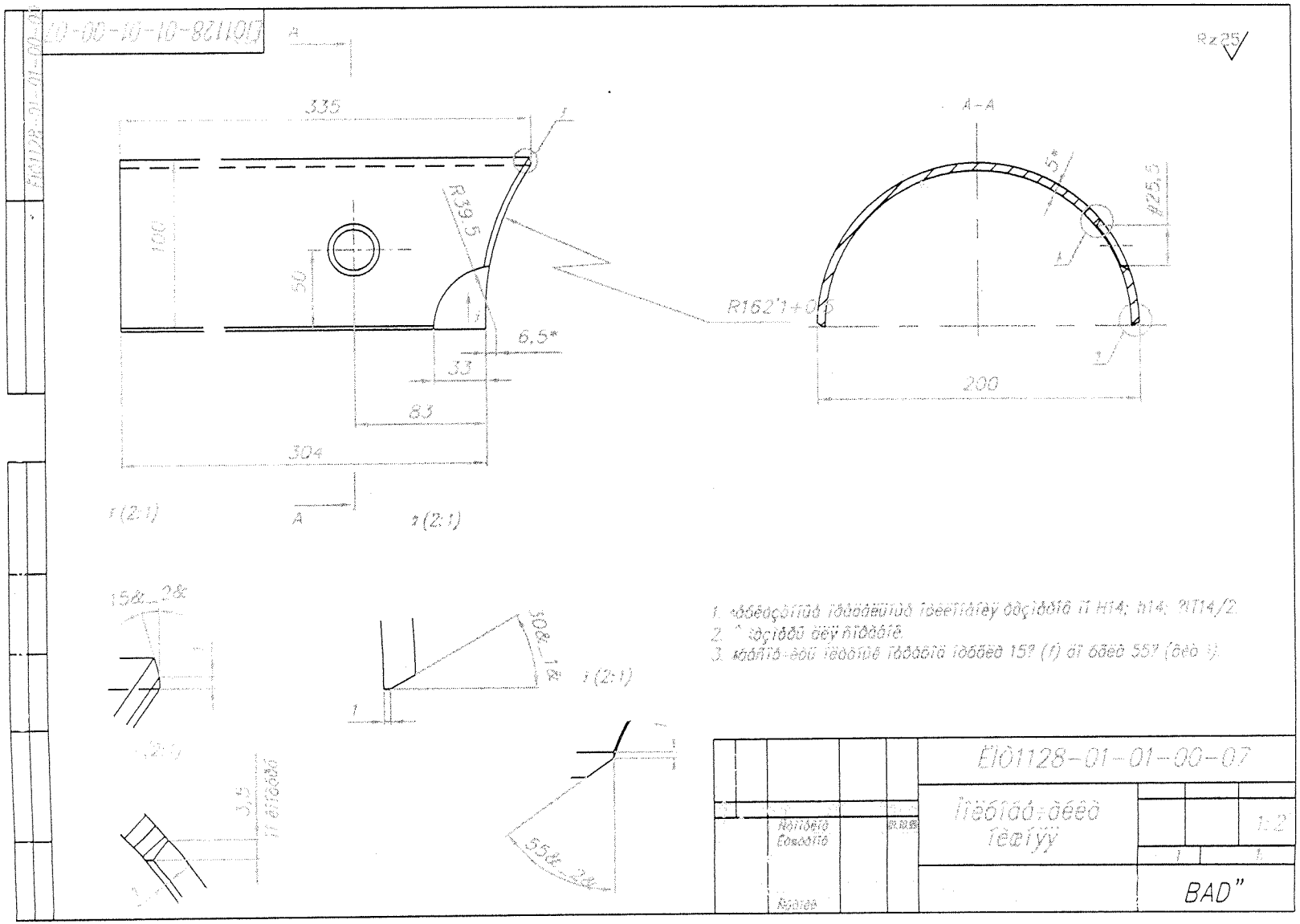

1128-01-01-00-07
Side Shell

Helium vessel

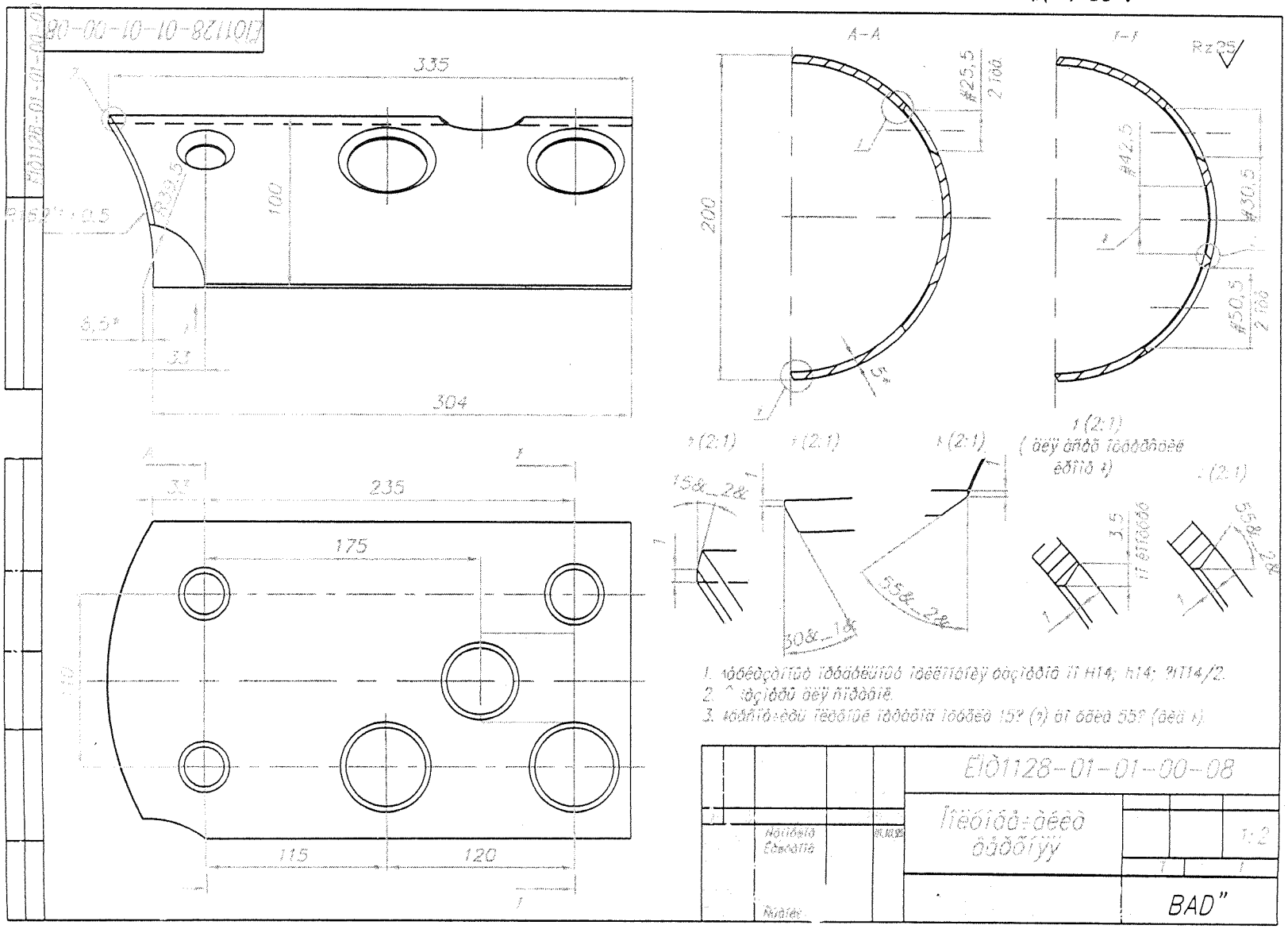

1128-01-01-00-08
Side Shell

Helium vessel

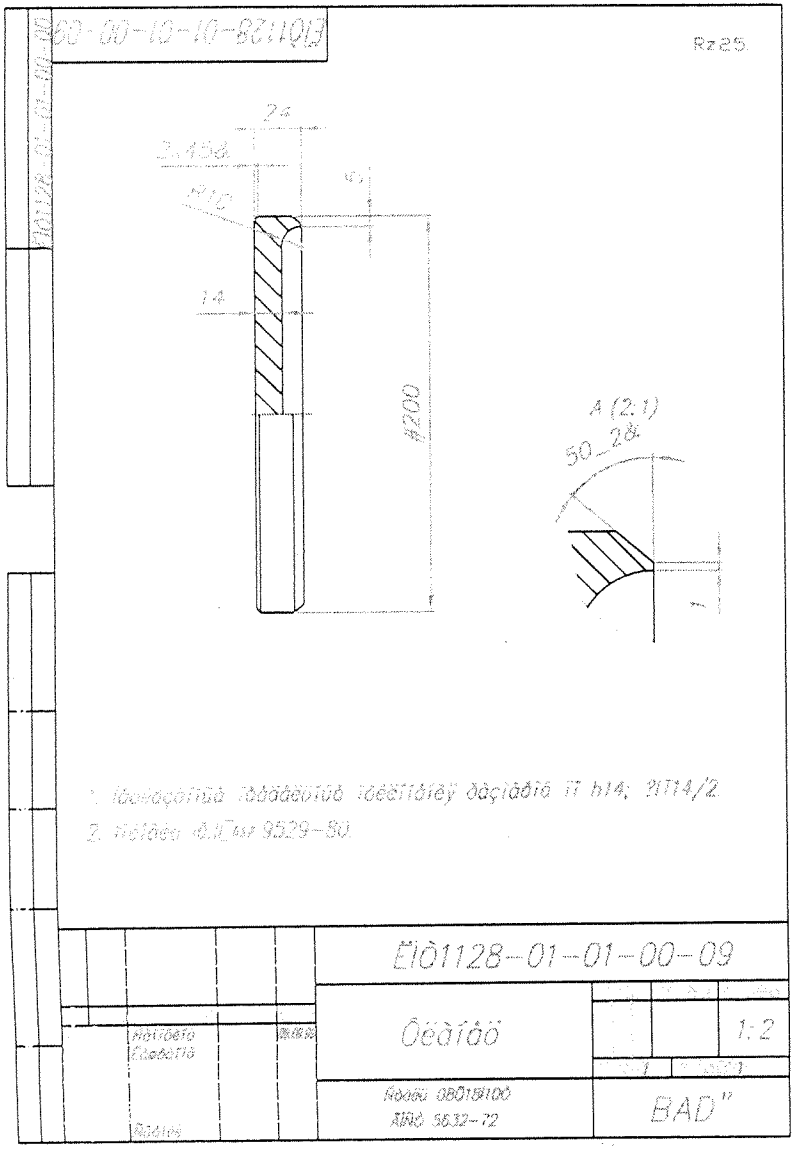

1128-01-01-00-09

Side Shell End Plate

Helium Vessel

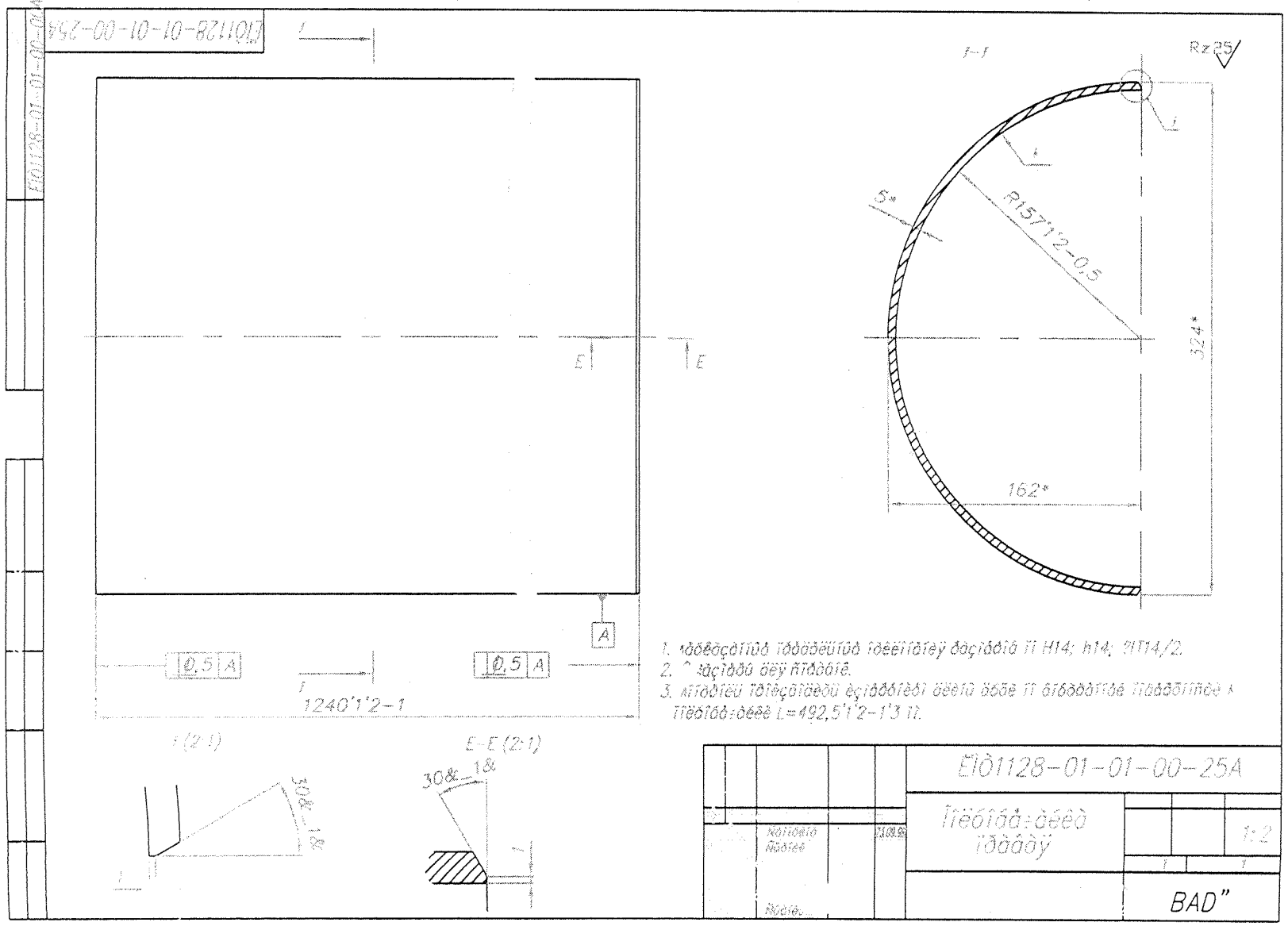

1128-01-01-00-25A
Outer Main Shell

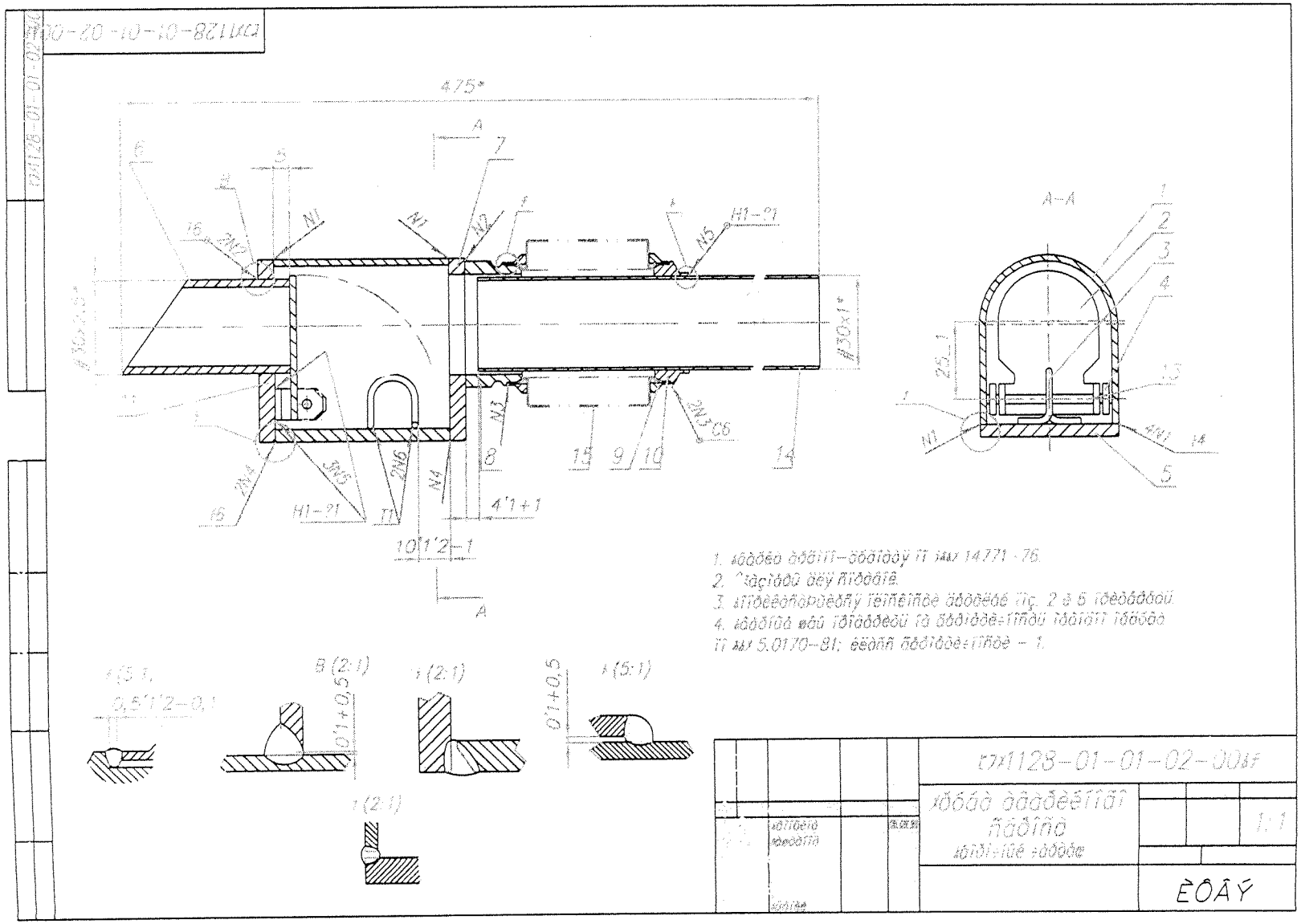

1128-01-01-02-00SB
Kautzky Port Check
Valve

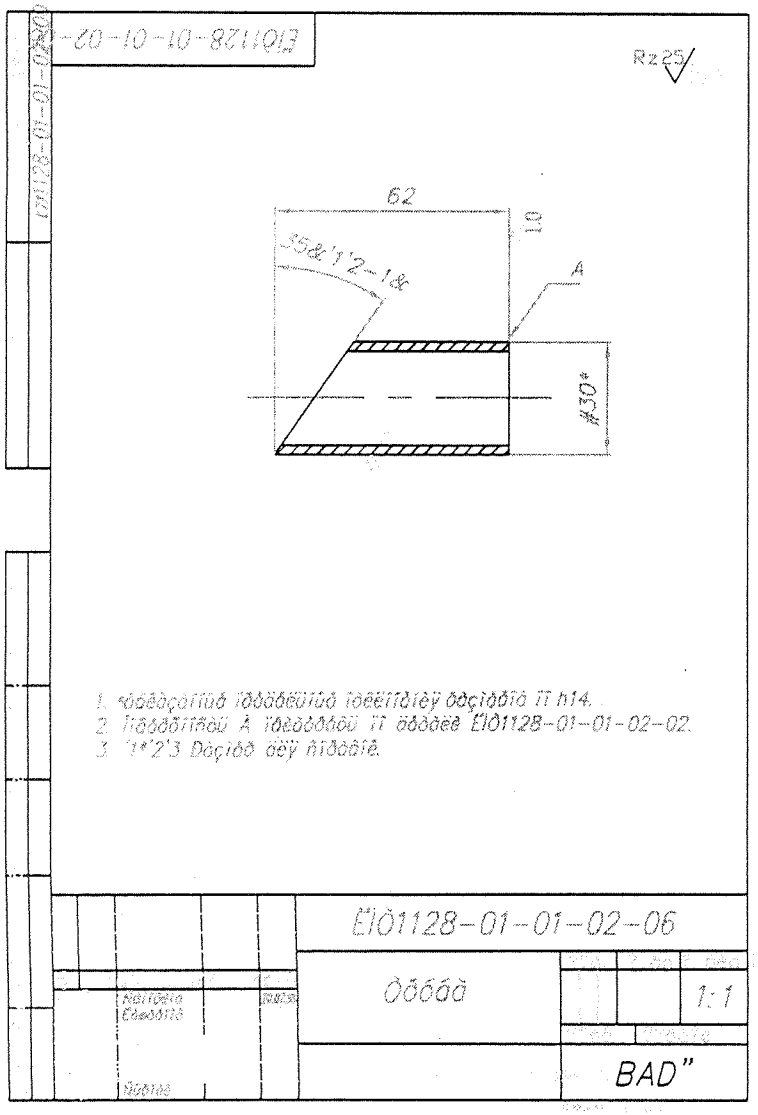

Kautzky Port
check Valve Subassembly
2.5

Helium Vessel

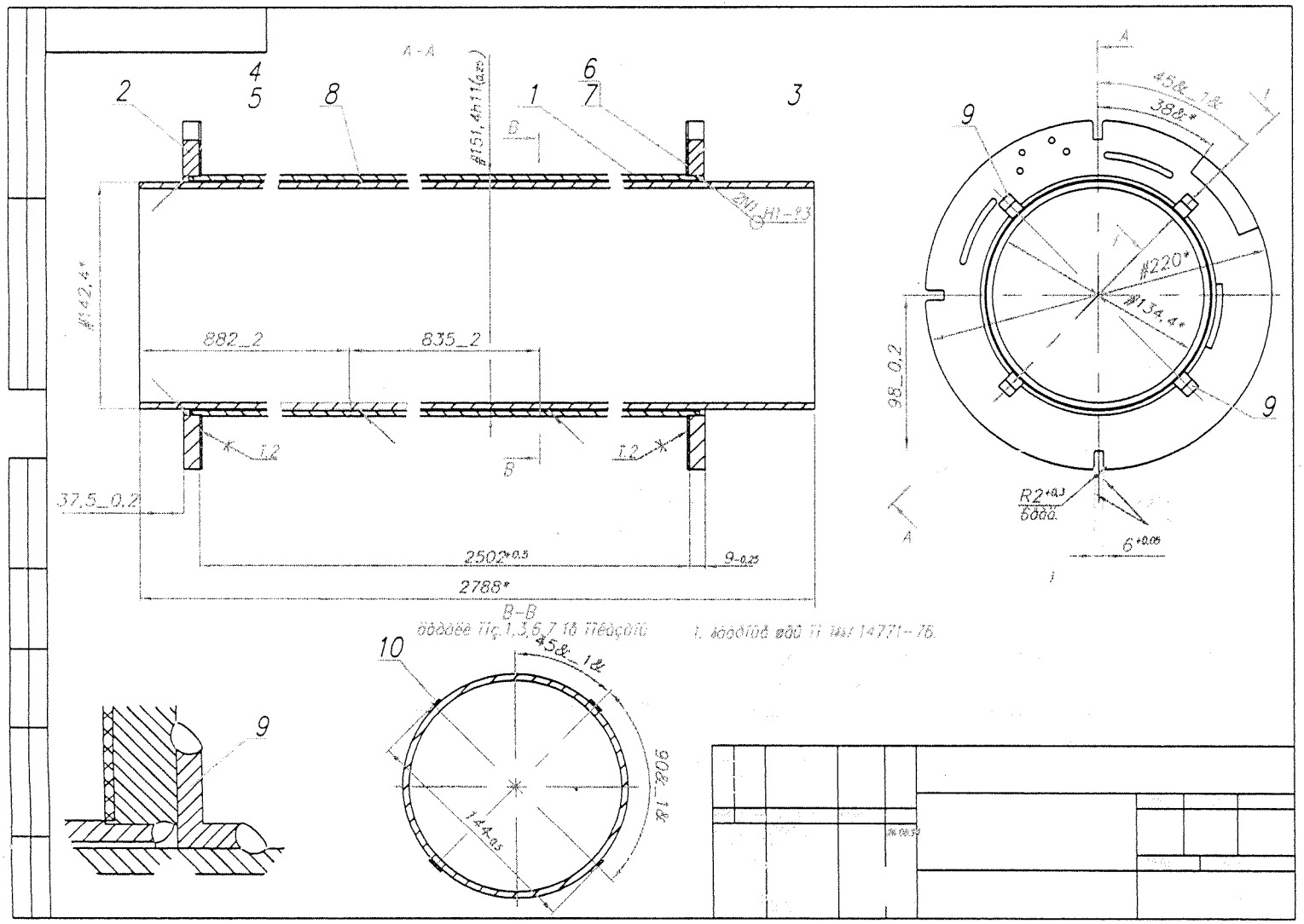

1128-01-01-30-10SB

Inner Shell and Coil Support

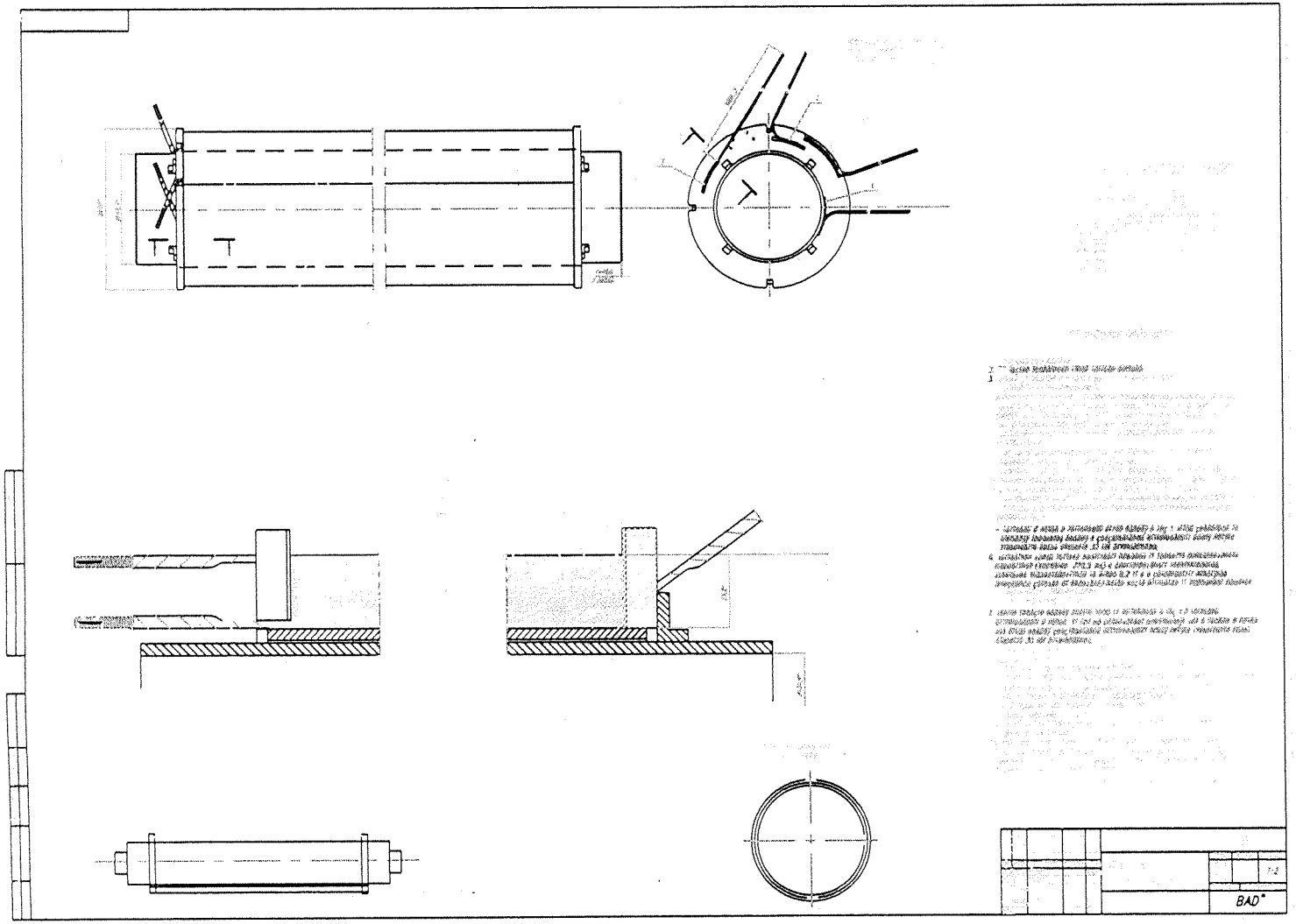

1128-01-01-30-00SB

Coil Winding

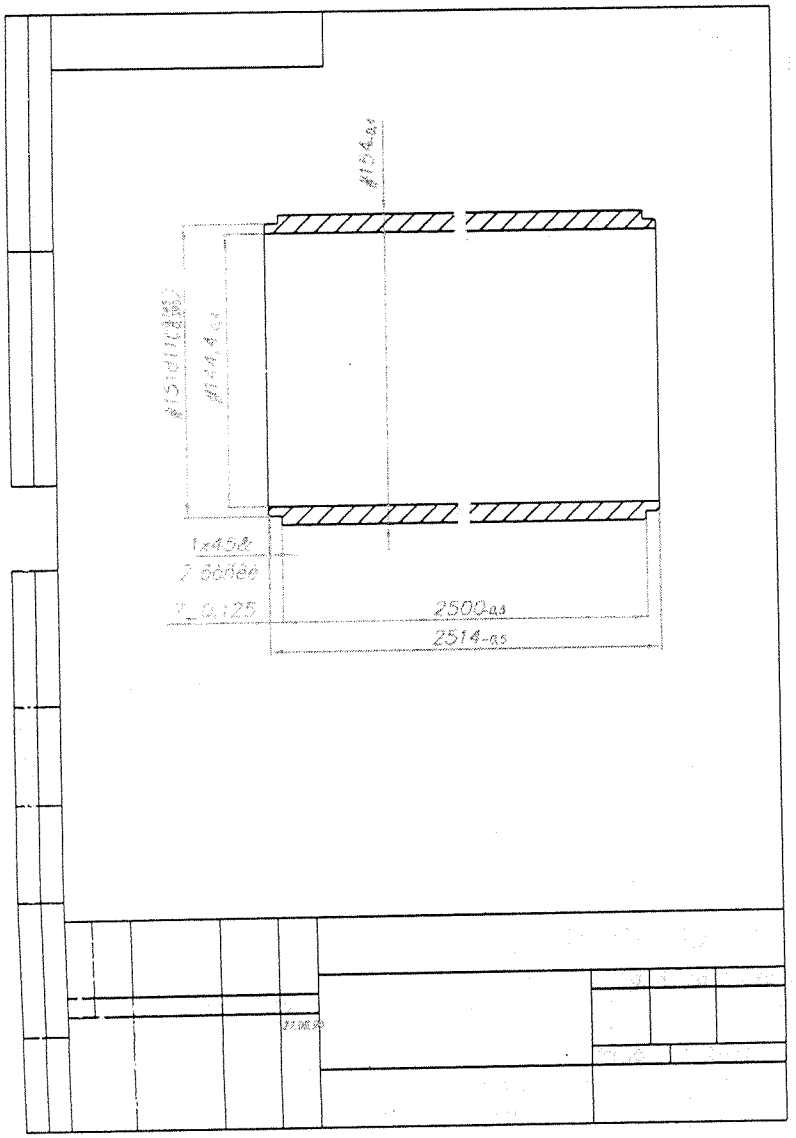

1128-01-01-30-11

Coil Mandrel

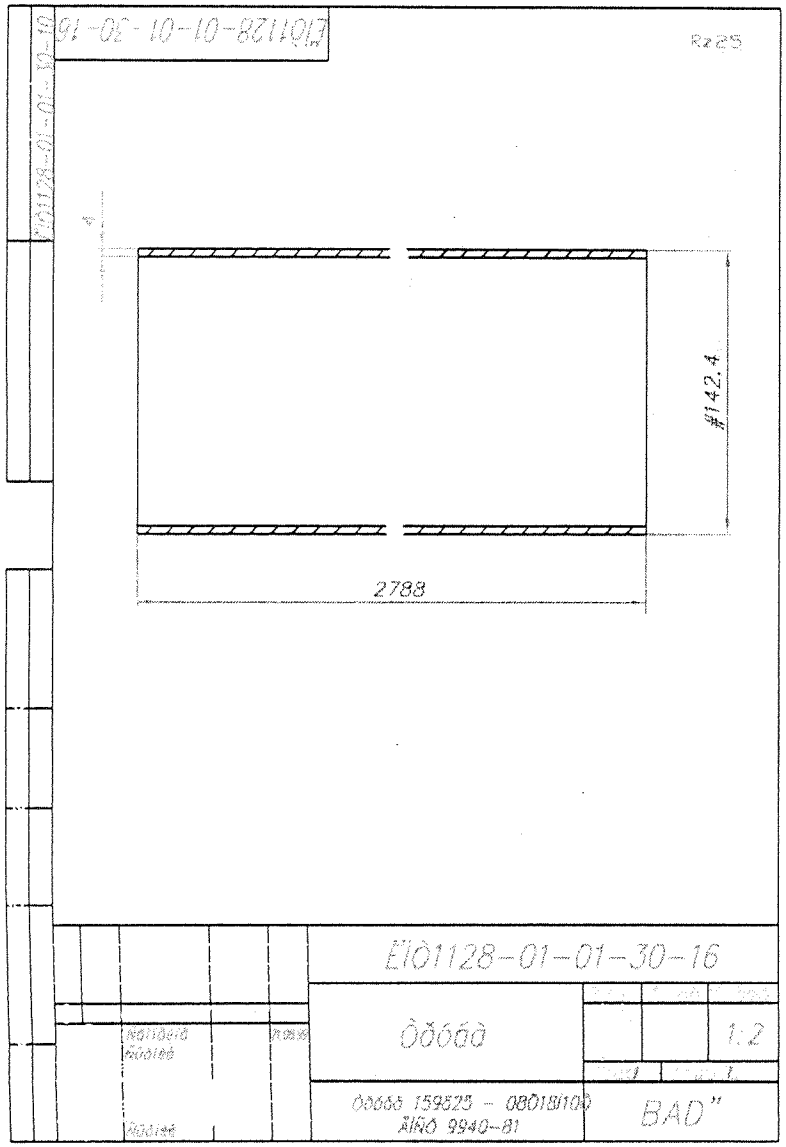

1128-01-01-30-16

Inner Helium Shell

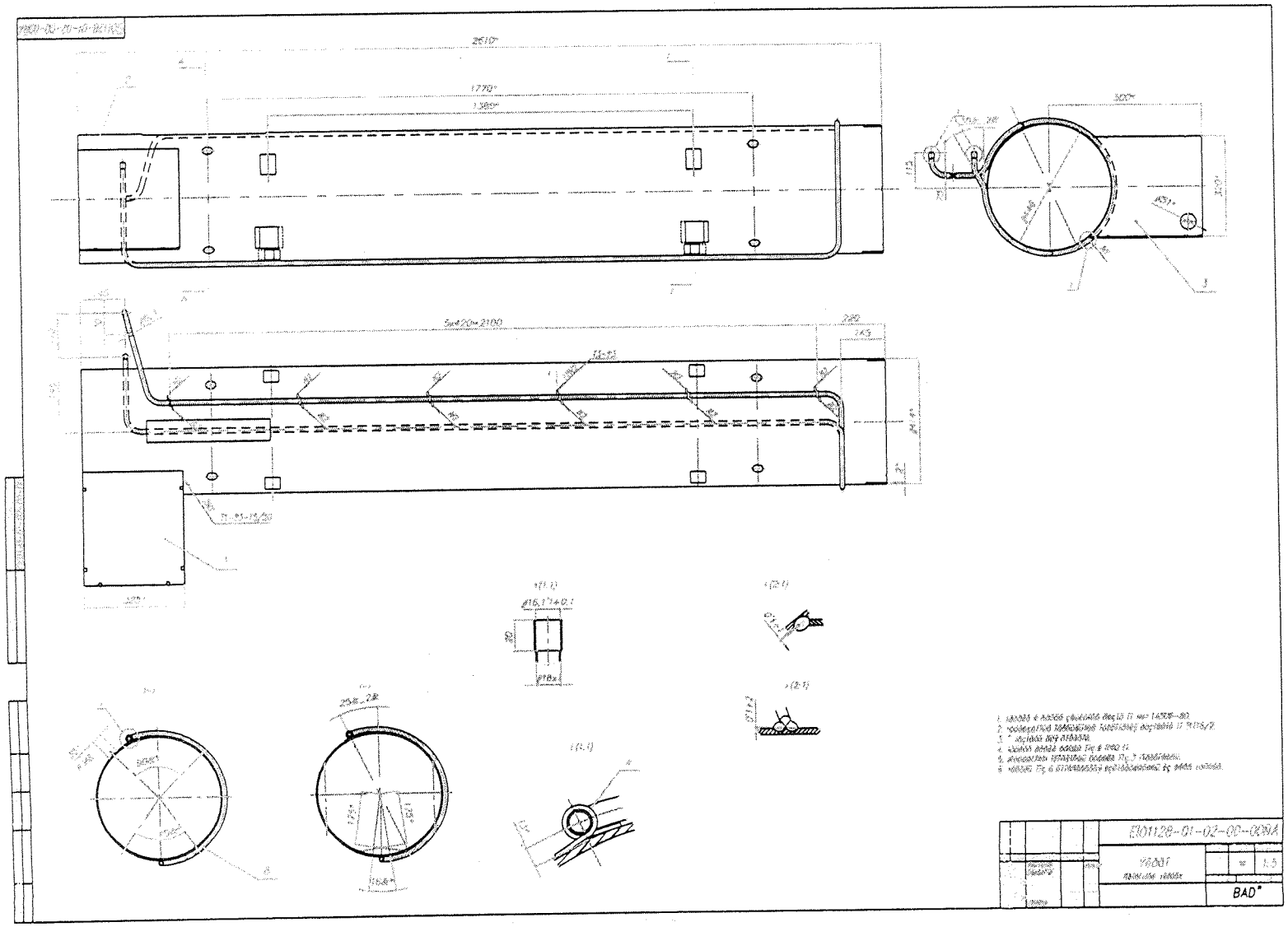

1128-01-02-00-00SB

Nitrogen Shield

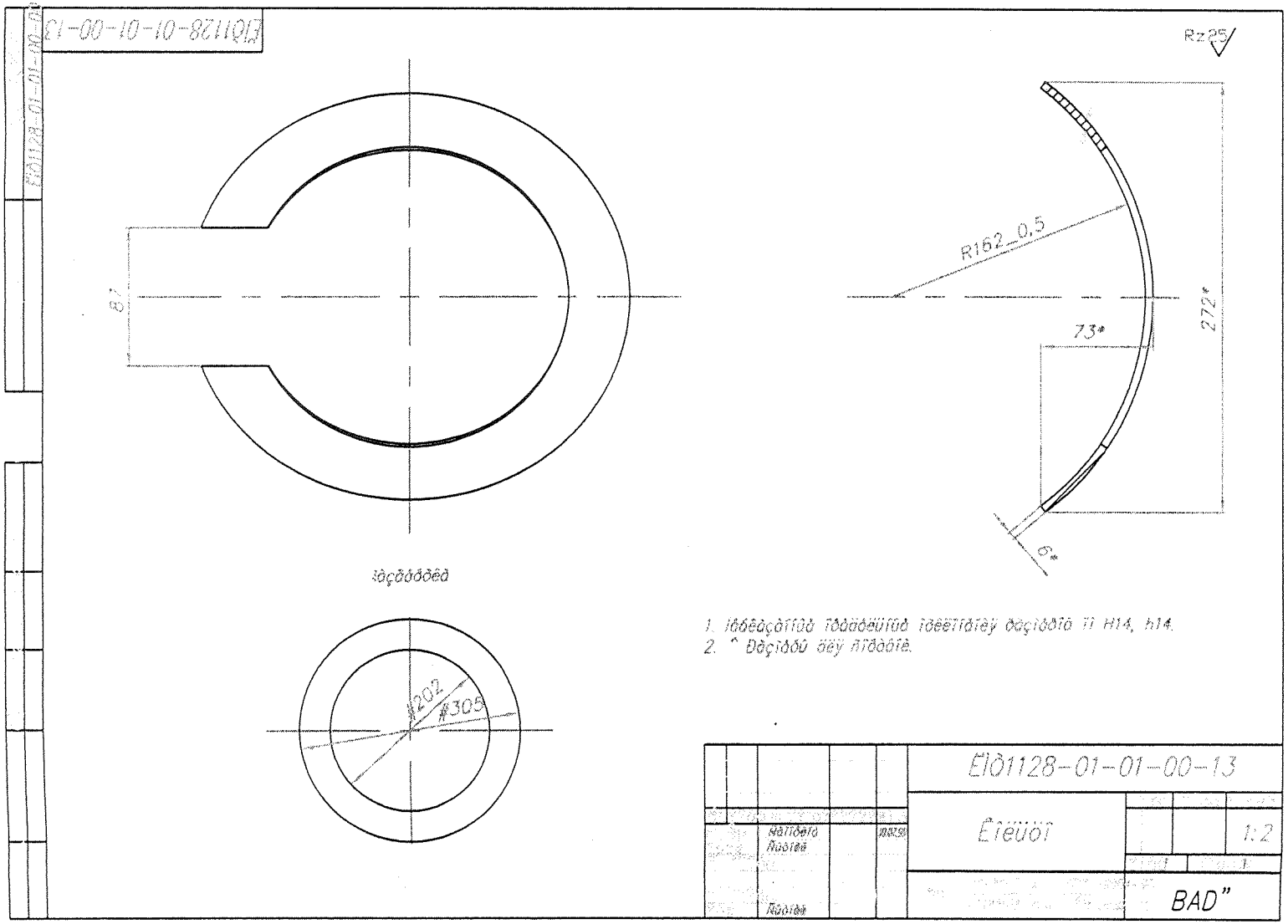

Side Shell to
Main Shell reinforcement
strip

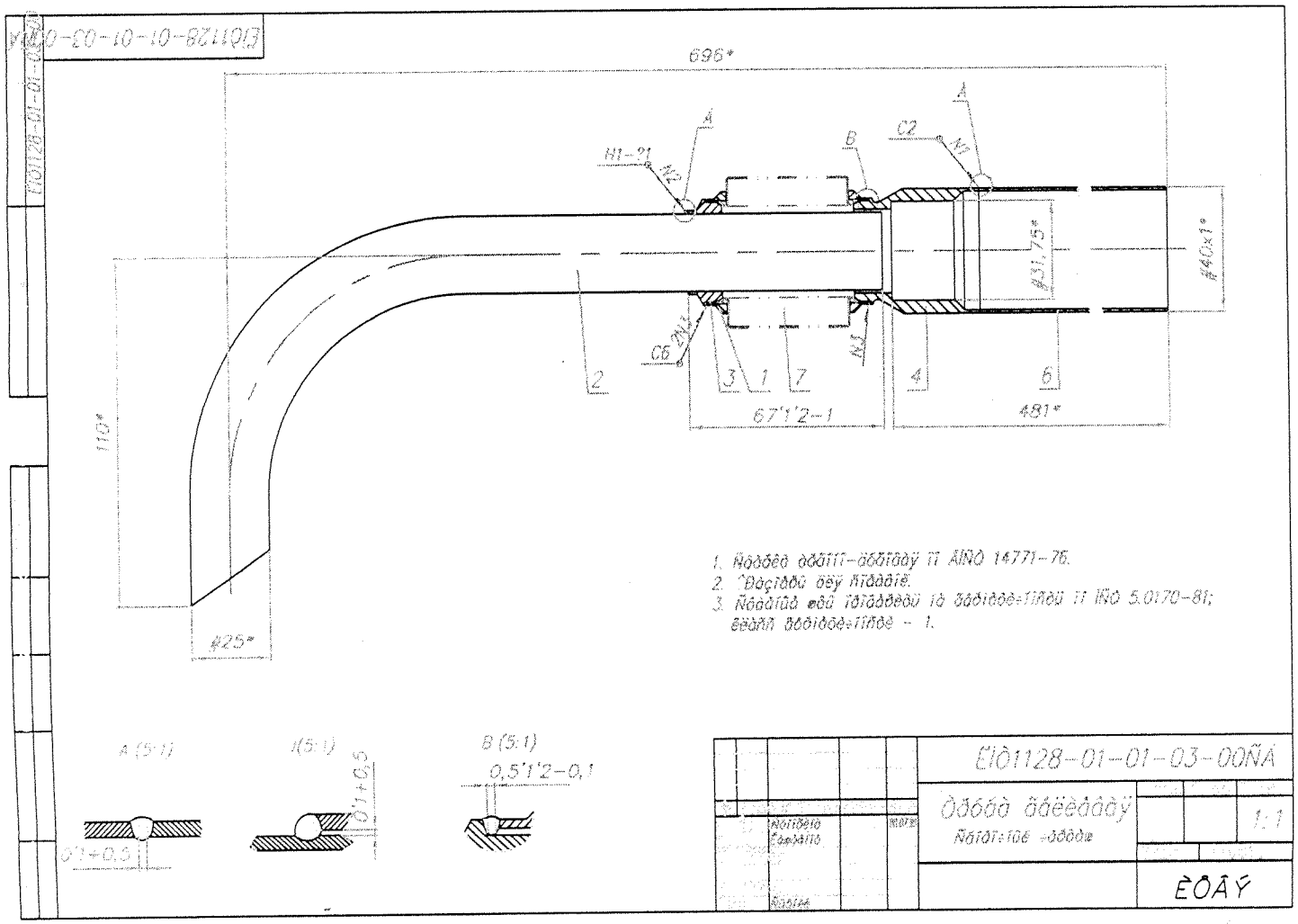

Helium Return Tube

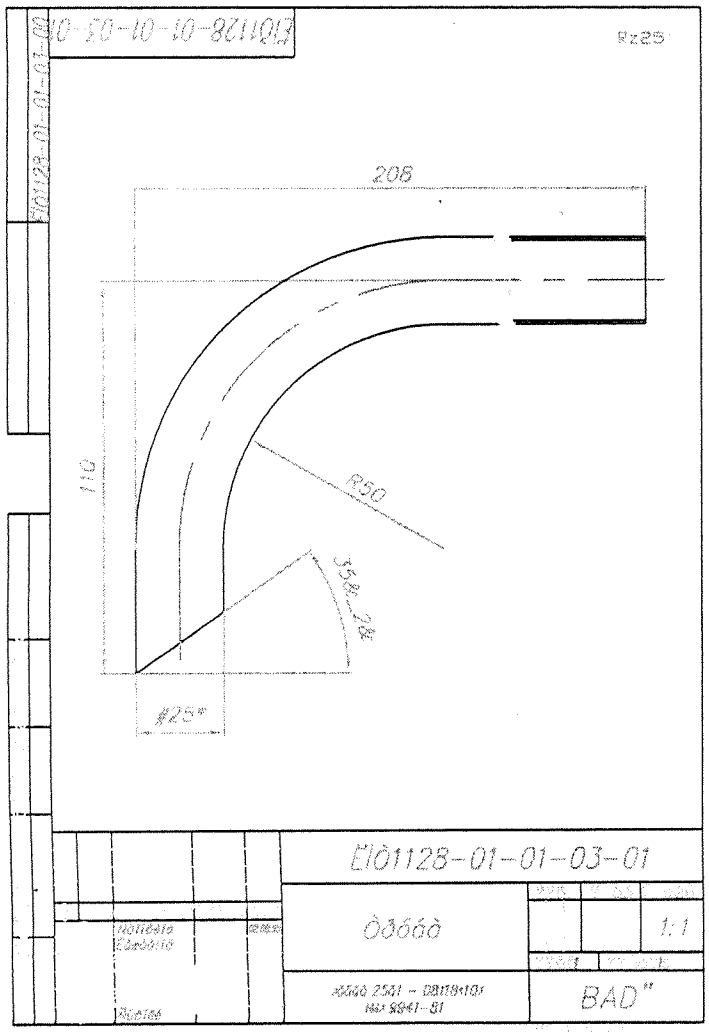

1

Helium Return Tube

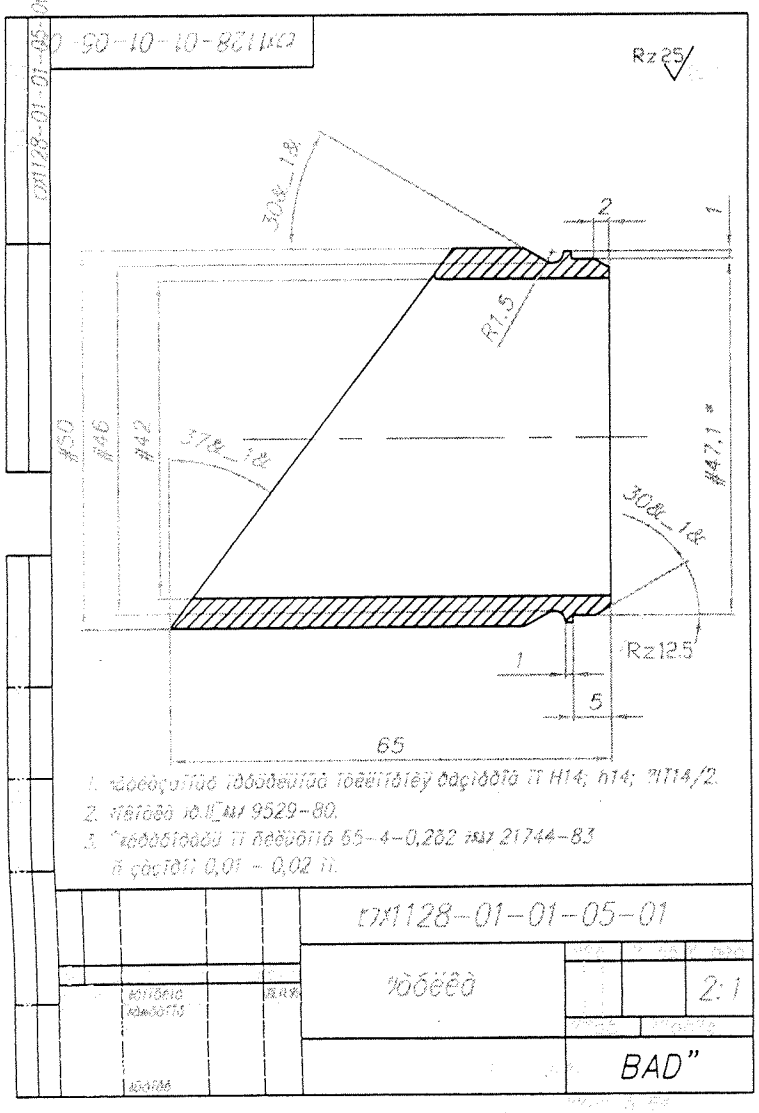

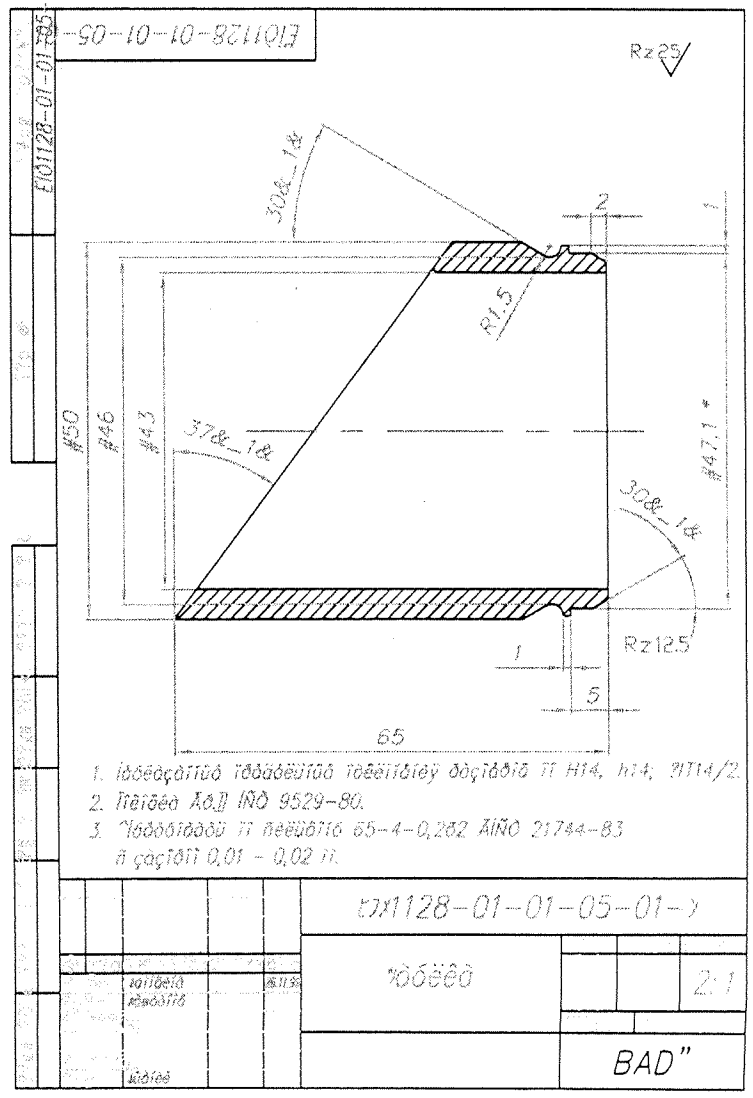

200 Amp Power Lead Port Subassembly

(Nozzle connection to side shell)

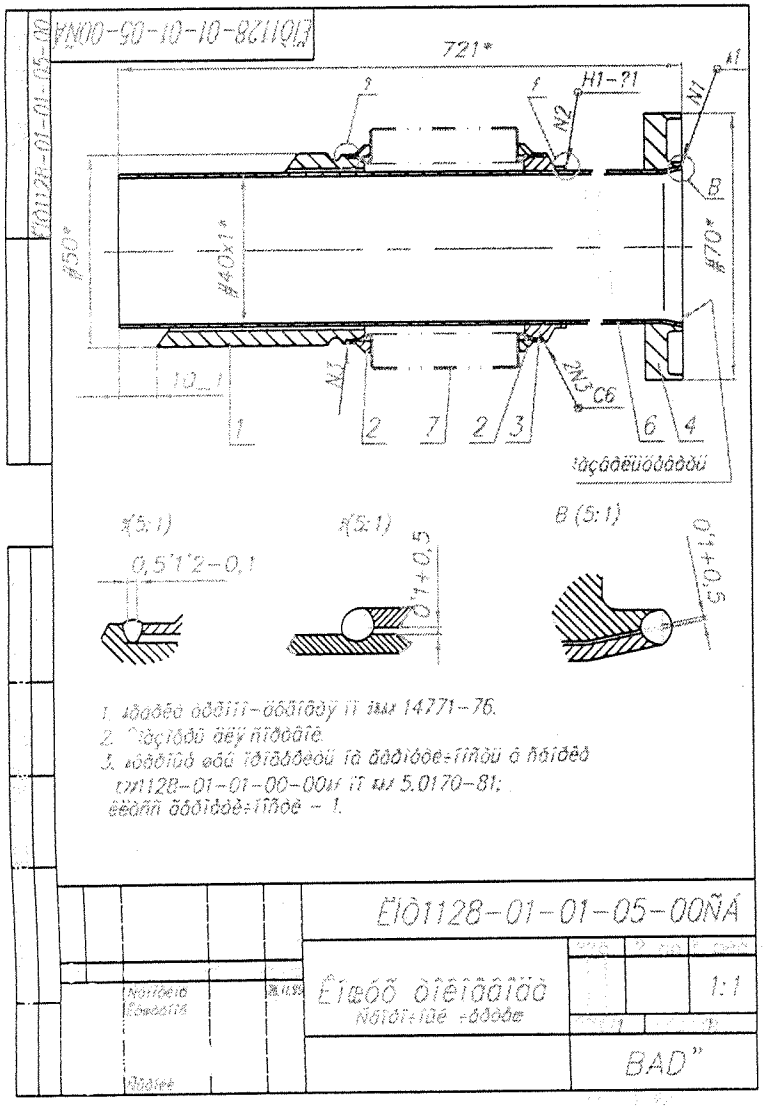

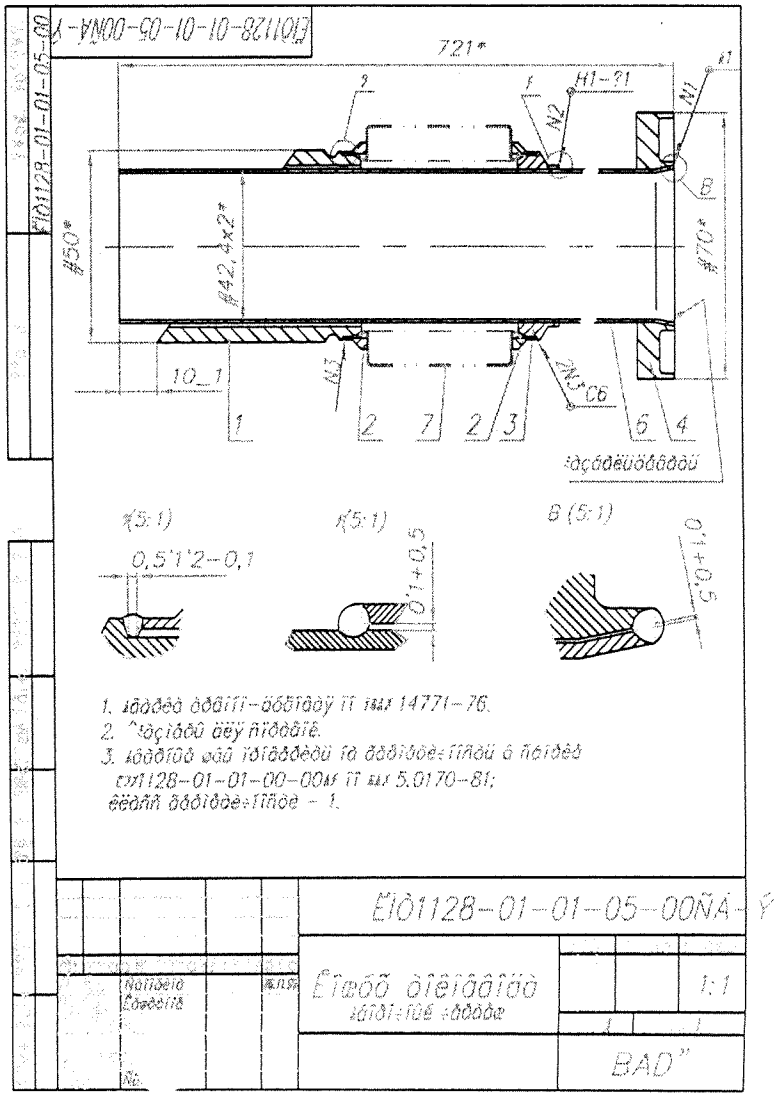

200 Amp Power Lead Ports

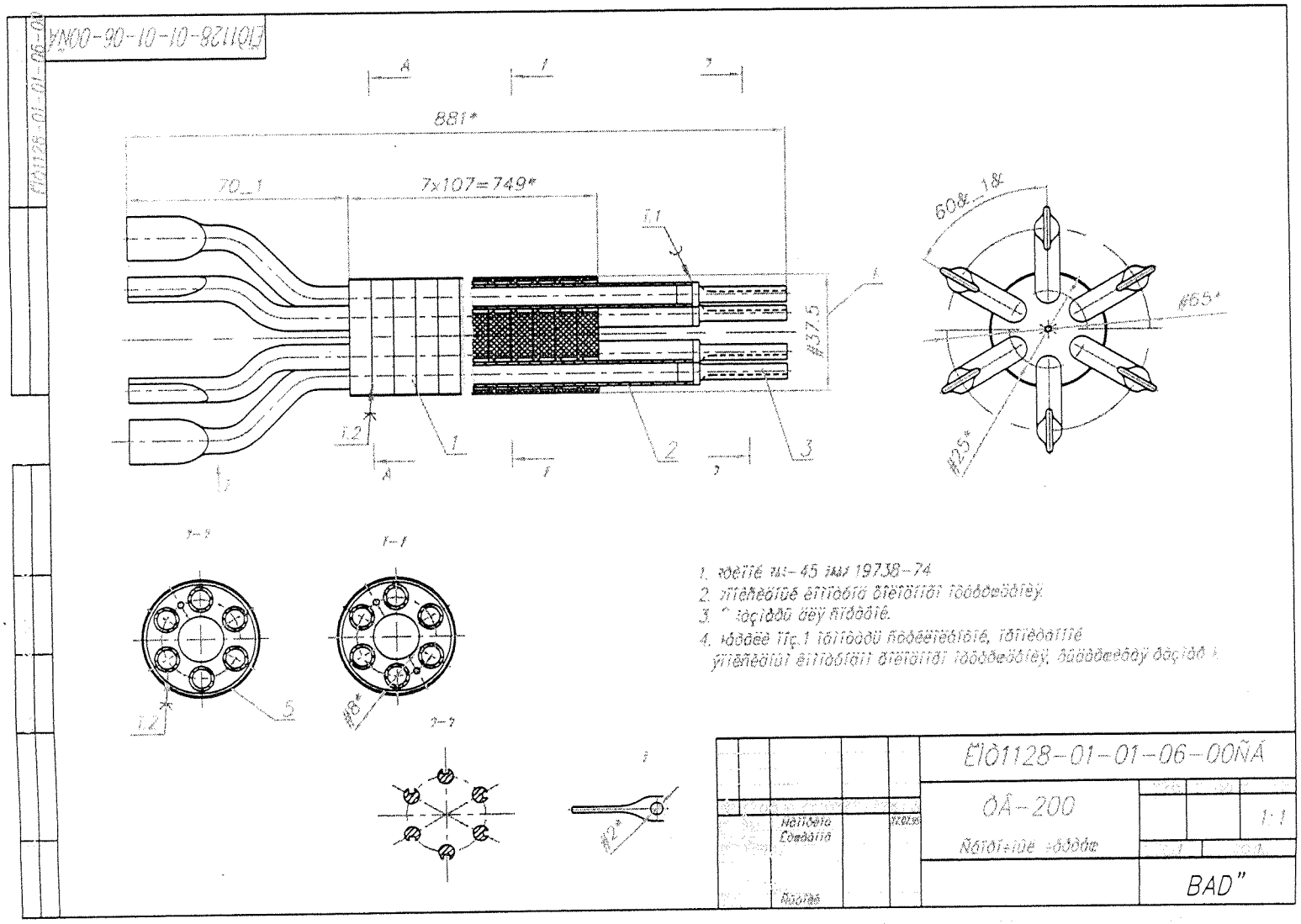

200 Amp Power Lead

1800 Amp Current Lead

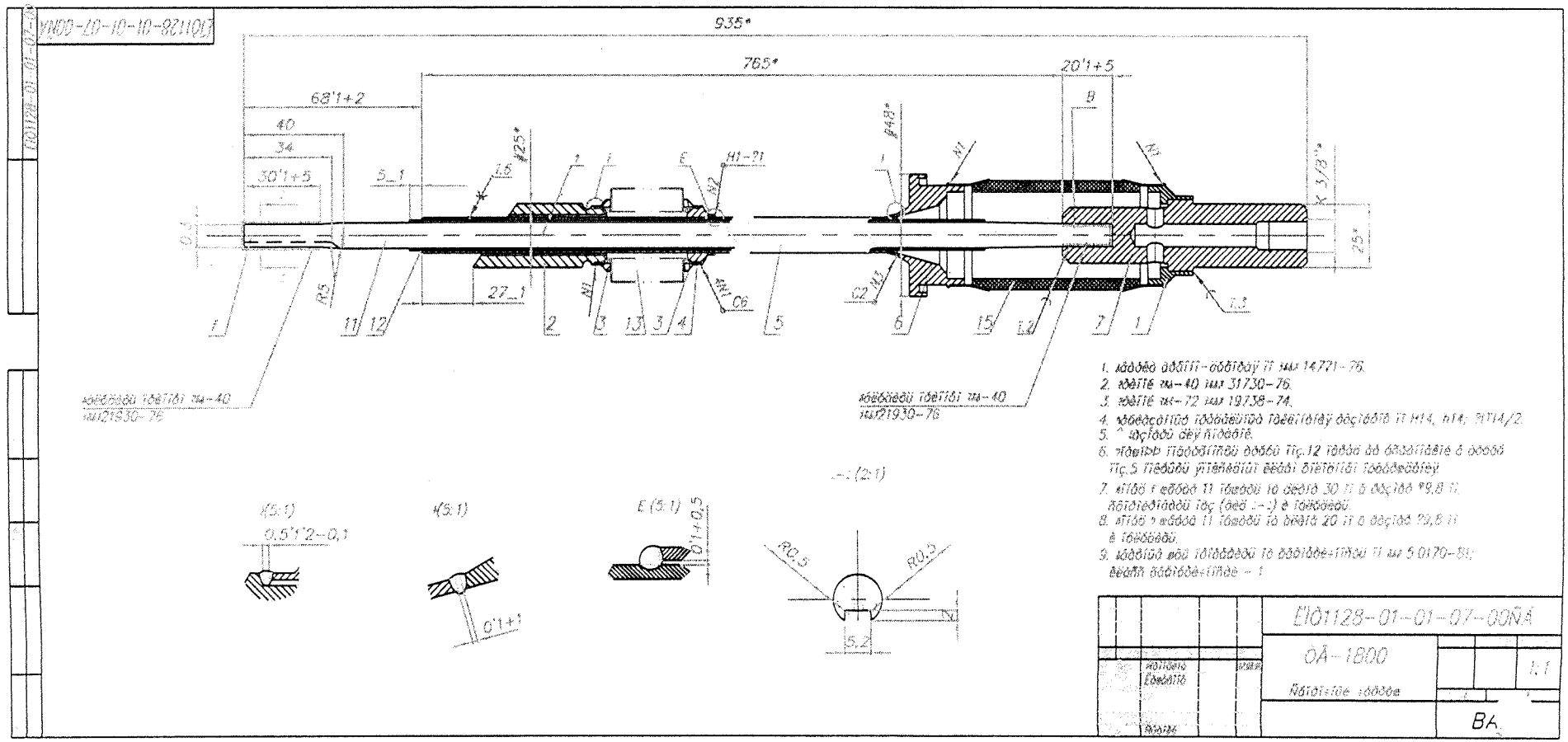

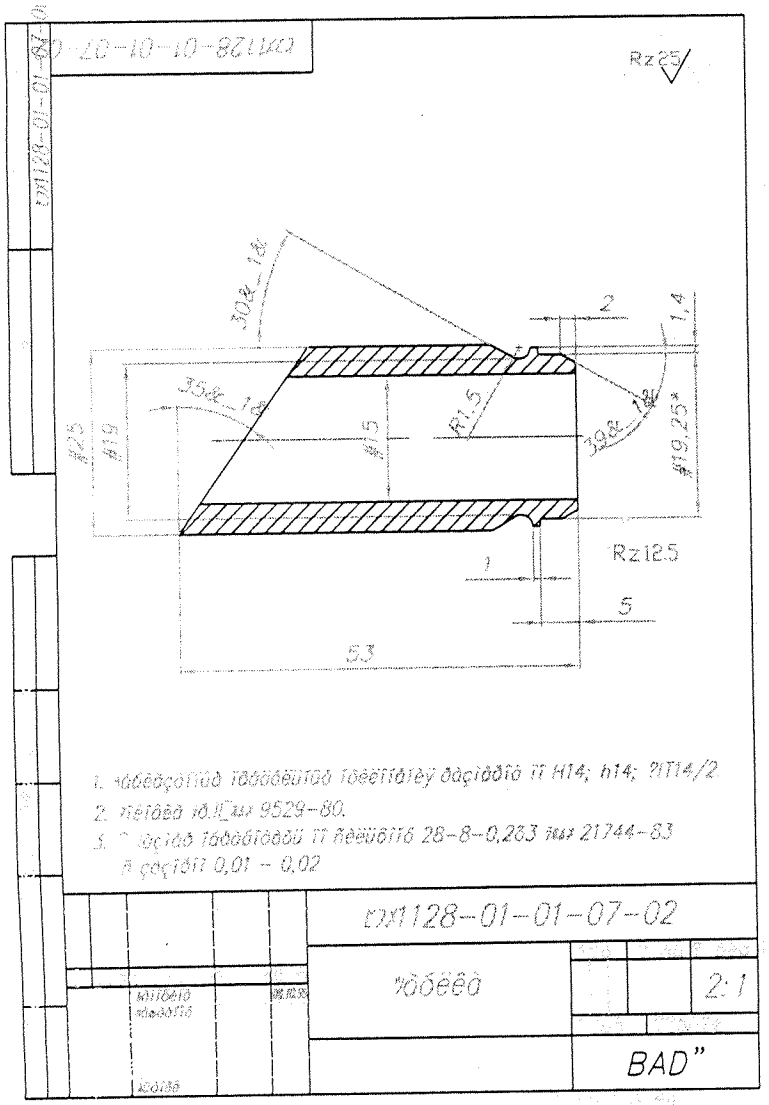

1800 Amp Current Lead
Subassembly

(Nozzle for connection to side shell)

Correction Element Tube

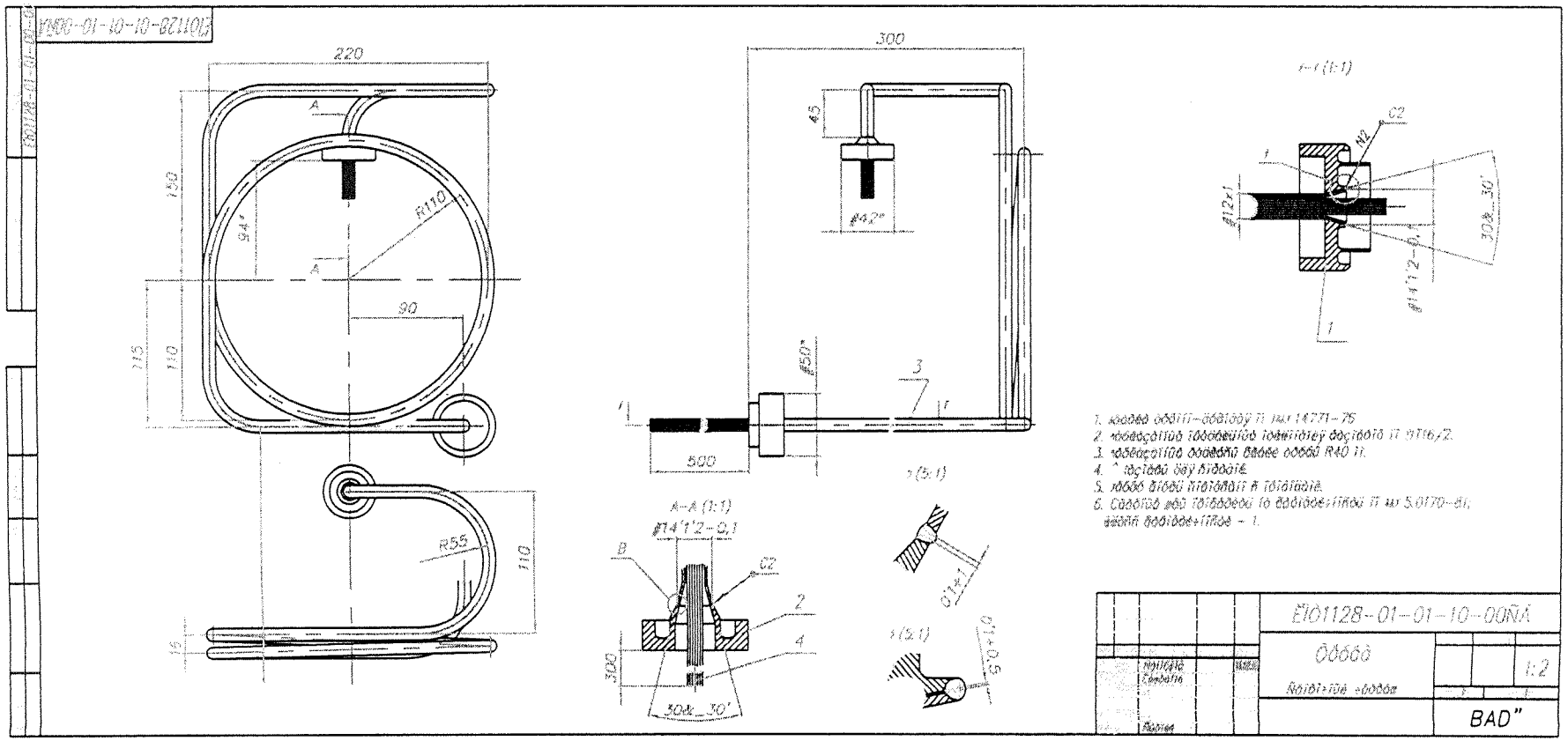

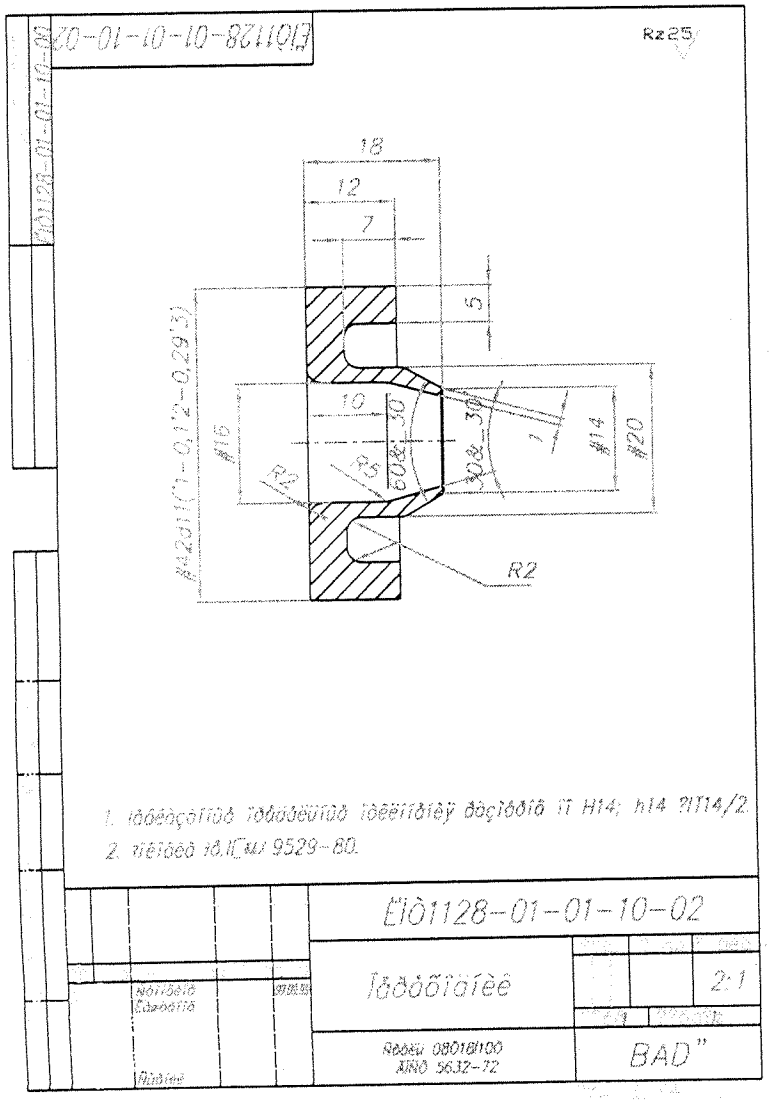

Correction Element Tube
Subassembly

(Nozzle for connection to Side Shell)

Vacuum vessel shell

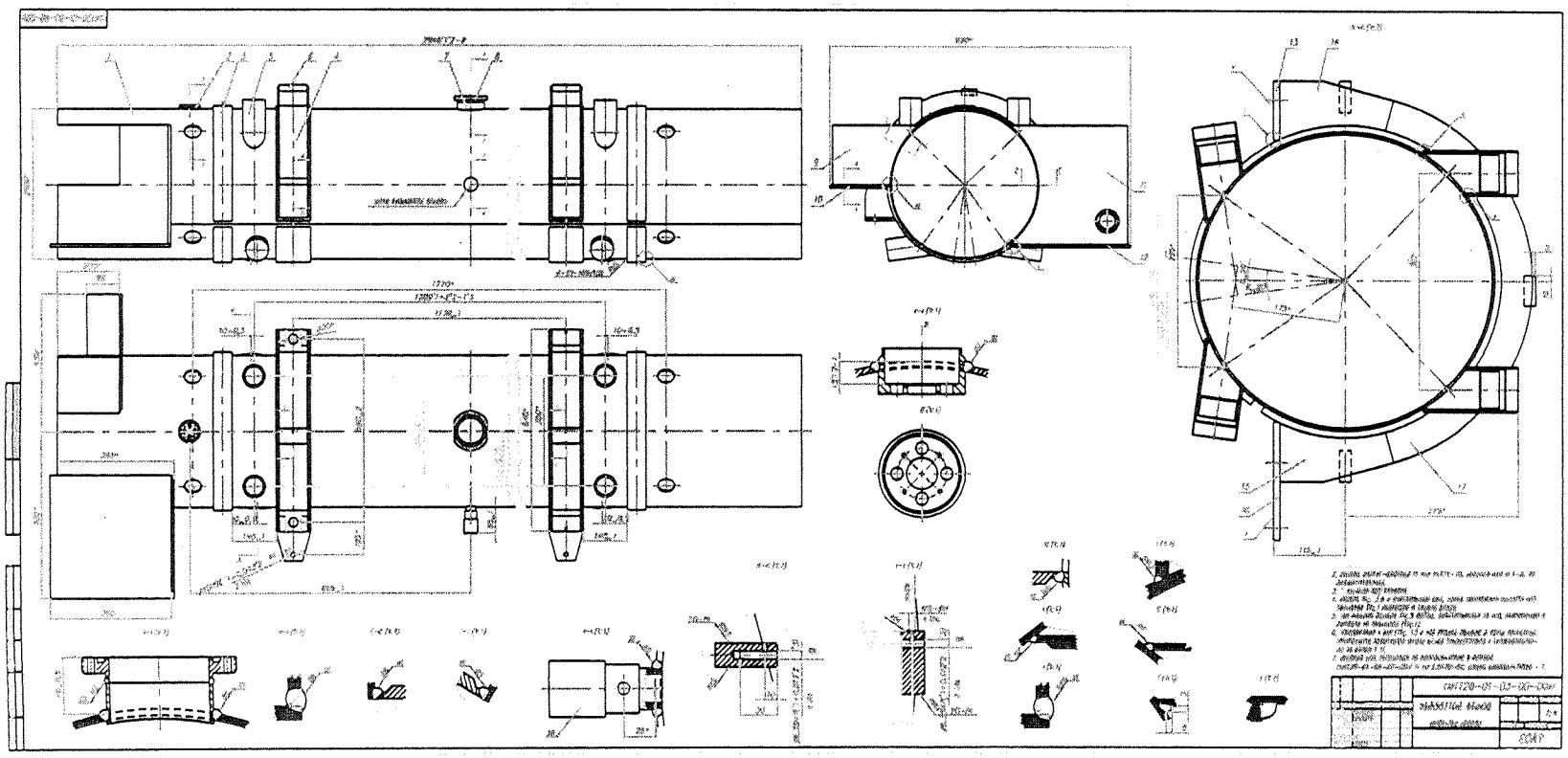

Vacuum Vessel shell

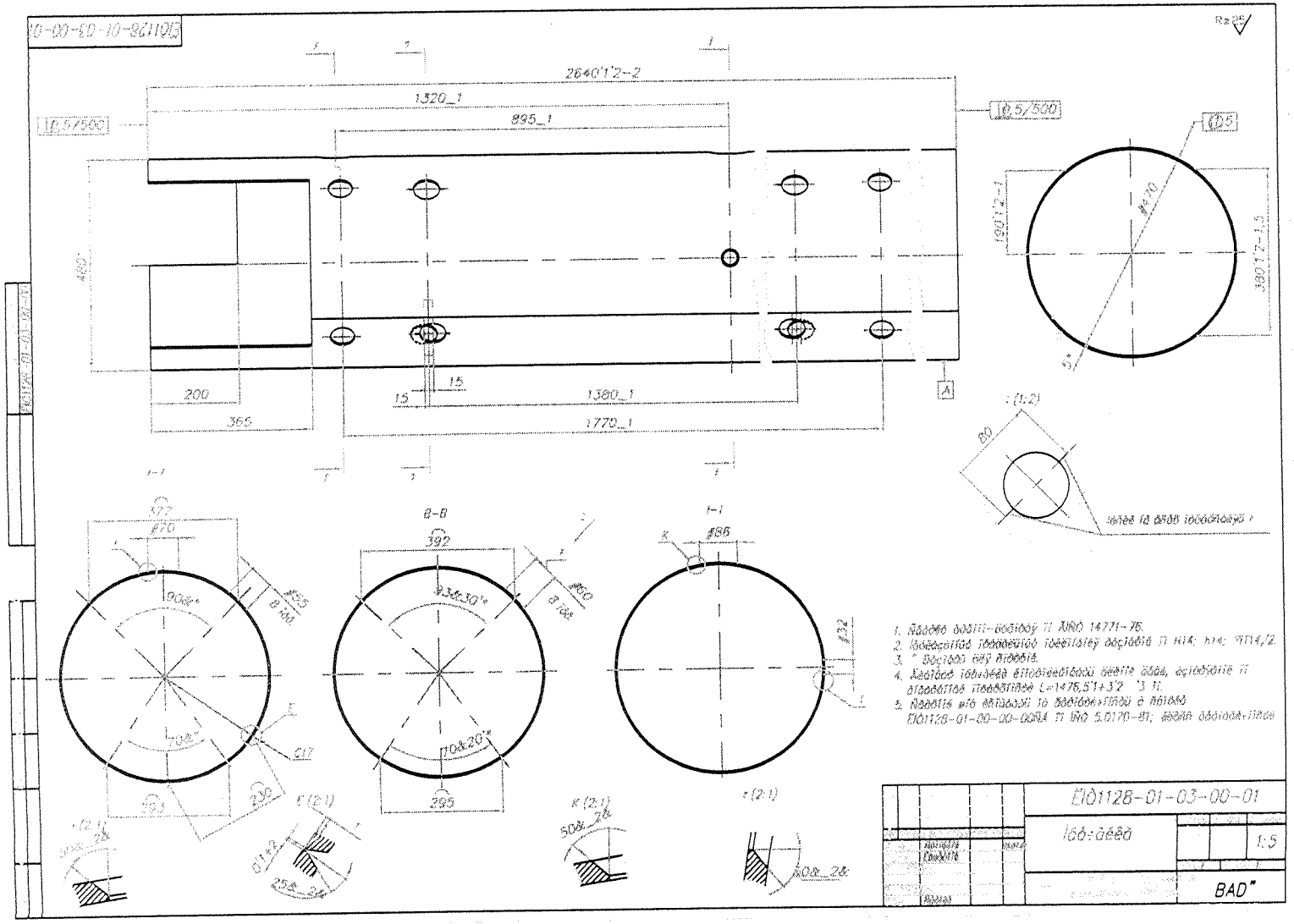

Welder Certifications for TEL2 Solenoid

РОССИЙСКАЯ ФЕДЕРАЦИЯ
RUSSIAN FEDERATION

НАЦИОНАЛЬНЫЙ АТТЕСТАЦИОННЫЙ КОМИТЕТ ПО СВАРОЧНОМУ ПРОИЗВОДСТВУ (НАКС)

NATIONAL ATTESTATION COMMITTEE ON WELDING PRACTICE (NACWP)

Аттестационное удостоверение специалиста сварочного производства I уровня (аттестованный сварщик)

Specialist in welding Production Certificate I level (certified welder)

Выдано Головным аттестационным центром Московского региона НАКС

Лицензия Госстрортехнадзора России 00КА № 012272 от 15 мая 2000 г.

№ *МР-ГАЦ-I-4676*
(номер аттестационного удостоверения)

Фамилия *Щекалев*
Surname

Имя *Василий*
First name

Отчество *Аркадьевич*
Middle name

Год рождения *1953*
Date of birth

№ *МР–ГАЦ–I–4676*
(номер аттестационного удостоверения)

Допущен к: *ручной аргонодуговой сварке неплавящимся электродом котельного оборудования*
(способ сварки и наименование объектов)

Протокол № 4676 от 28 декабря 2002 г.

Удостоверение действительно до:
27 декабря 2003 г.

Руководитель
ГАЦ МР НАКС *(Юрлова А.А.)*
подпись Ф.И.О.

М.П.

№ *МР–ГАЦ–I–4676*
(номер аттестационного удостоверения)

Области распространения аттестации

(в скобках приведены обозначения в соответствии с EN 287)

Параметры сварки	Область распространения аттестации
Способ сварки	РАД[141]
Вид деталей	Л, Л+Т, Т[P, P+T, T]
Типы швов	СШ, УШ [BW, FW]
Группа свариваемого материала	M01, M11[W01, W11]
Присадочный материал или покрытие электрода	M01, M11 [W01, W11]
Толщина деталей, мм	от 3 до 16 [M01]
	от 3 до 20 [M11]
Наружный диаметр, мм	от 25 до 266 [M01]
	от 25 и выше [M11]
Положение при сварке	Н1, Н2, Г*, В1, П1, П2, [PA, PB, PC*, PF, PE, PD]
Вид соединения	ос(сп,бп) [ss mb,nb] дс(зк,бз) [bs gg ,ng]

* -только для листов

№ МР–ГАЦ–I–4676
(номер аттестационного удостоверения)

НАЦИ
I
NATIO
V
2
Р
Г
спе
Spec

Дата	Сведения о работе сварщика или аттестациях (заполнять каждые 6 мес.)	Ф.И.О., должность ответ. лица	Подпись, дата
20.05.03г.	Работа выполн. согл. свод. распор. аттестации	Серебрякова В.А. гл. инж. Пузанова Н.А. гл. сб-к	
18.11.2003г.	Работа выполн. согл. свод. распор. аттестации	Серебрякова В.А. гл. инж. Иванова Н.А. гл. св-к	

№ 1

№ МР–ГАЦ–I–4676
(номер аттестационного удостоверения)

Срок действия продлен до:
«27» декабря 2004 г.
На основании решения аттестационной комиссии
ГАЦ МР НАКС № [illegible]
Протокол № МР-4676 от «8» декабря 2003 г.
Руководитель
ГАЦ МР НАКС _____ (Орлов А.А.)
подпись Ф.И.О.

М.П.

Срок действия продлен до:
«___» _____ г.
На основании решения аттестационной комиссии
ГАЦ МР НАКС № _____
Протокол № _____ от «___» _____ г.
Руководитель
ГАЦ МР НАКС _____ (_____)
подпись Ф.И.О.

М.П.

Головной аттестационный центр Московского региона Национального аттестационного комитета по сварочному производству (ГАЦ МР НАКС)

УТВЕРЖДАЮ
Генеральный директор
ГАЦ МР НАКС
(Орлова А.А.)
8 декабря 2003 г.

ПРОТОКОЛ
№ ПР2-4676/МР-ГАЦ от 8 декабря 2003 г.
решения аттестационной комиссии по заявке-ходатайству о продлении срока действия аттестационного удостоверения сварщика.

Состав аттестационной комиссии:
Председатель комиссии: *специалист IV уровня Неровный В .М.*
Члены комиссии: *специалист IV уровня Рыбачук А.М.*
специалист IV уровня Евдокимова А.А..
Представитель Госгортехнадзора России: *главный государственный инспектор Шельпяков А.А.*

Вид аттестации: ***продление***

1.Сведения о сварщике

1.1	Фамилия, имя, отчество	***Щекалев Василий Аркадьевич***
1.2	Год рождения	*1953*
1.3	Образование и специальность	*Среднее- техническое. электрогазосварщик*
1.4.	Место работы	***ФГУП ГНЦ РФ Институт физики высоких энергий***
1.5.	Стаж работы по сварке	*19 лет*
1.7	Квалификационный разряд и уровень по САСв	*7 разряд, 1 уровень*
1.8	Документы, подтверждающие первичную аттестацию	*Протокол № 1283 от 28.12.00 г.* *Удостоверение № МР-ГАЦ-I- 1283 , срок действия до 28.12.02 г.* *Протокол № 4676 от 28.12.02* *Удостоверение № МР-ГАЦ- I-4676 , срок продлен до 27.12.03 г.*

2.Документы, представленные аттестационной комиссии о продлении срока действия аттестации

2.1 Заявка-ходатайство № 490-08/31 от 14 11. 03 г.
2.2. Подлинник аттестационного удостоверения № МР-ГАЦ-I-4676 , срок действия продлен 27.12.03 г.
2.3. Копия медицинского заключения об отсутствии противопоказаний для работы сварщиком.
2.4. Итоговая справка о качестве сварочных работ

2.5. Заверенная выписка (копия) из трудовой книжки, подтверждающая стаж работы по сварке.

3. Заключение аттестационной комиссии

3.1. На основании рассмотрения заявки-ходатайства № 490-08/31 от 14 11. 03 г. .протокола первичной аттестации № 1283 от 28.12.00 г., справки о качестве выполнения сварочных работ продлить вторично срок действия аттестационного удостоверения № МР-ГАЦ-I- 4676 от 28.12.02 г. сварщика Щекалева В.А. на один год до 27.12.04 г.

3.2. Допустить сварщика Щекалева В.А. к ручной аргонодуговой сварке неплавящимся элетродом следующих опасных технических устройств, подконтрольных Госгортехнадзору России:

- ***котельное оборудование***

3.3. Установить следующую область распространения аттестации (латинским шрифтом приведены обозначения согласно европейской классификации)

Параметры сварки	Область распространения аттестации
Способ сварки	РАД(141)
Вид деталей	Л,Л+Т,Т[P,P+T,T]
Типы швов	СШ,УШ [BW,FW]
Группа свариваемого материала	M01, M11 [W01, W11]
Присадочный материал или покрытие электрода	M01, M11 [W01, W11]
Толщина деталей, мм	3,0-16,0 (M01) 3,0 – 20,0 (M11)
Наружный диаметр, мм	От 25 до 266 (M01) От 25 и выше (M11)
Положение при сварке	H1, H2, Г*, B1, П1, П2 [PA, PB, PC, PF, PE, PD]
Вид соединения	ос(сп,бп) [ss mb,nb] дс(зк,бз) [bs gg ,ng]

* - только для листов

Председатель комиссии: _____ (*Неровный В.М.*)

Члены комиссии: _____ (*Рыбачук А.М.*)

_____ (*Евдокимова А.А.*)

Представитель Госгортехнадзора России: _____ (*Щельяков А.А.*)

УПРАВЛЕНИЕ ПО КОТЛОНАДЗОРУ И НАДЗОРУ за подъемными сооружениями Госгортехнадзора России

Продленное удостоверение **№ МР–ГАЦ–I-4676**

Срок действия удостоверения до 27.12.04 г.

REV.	DESCRIPTION	DRAWN / DATE
		APPROVED / DATE
A	REMOVED TP-U1 & TP-D1, ADDED NOTE	RWH / 12.7.01

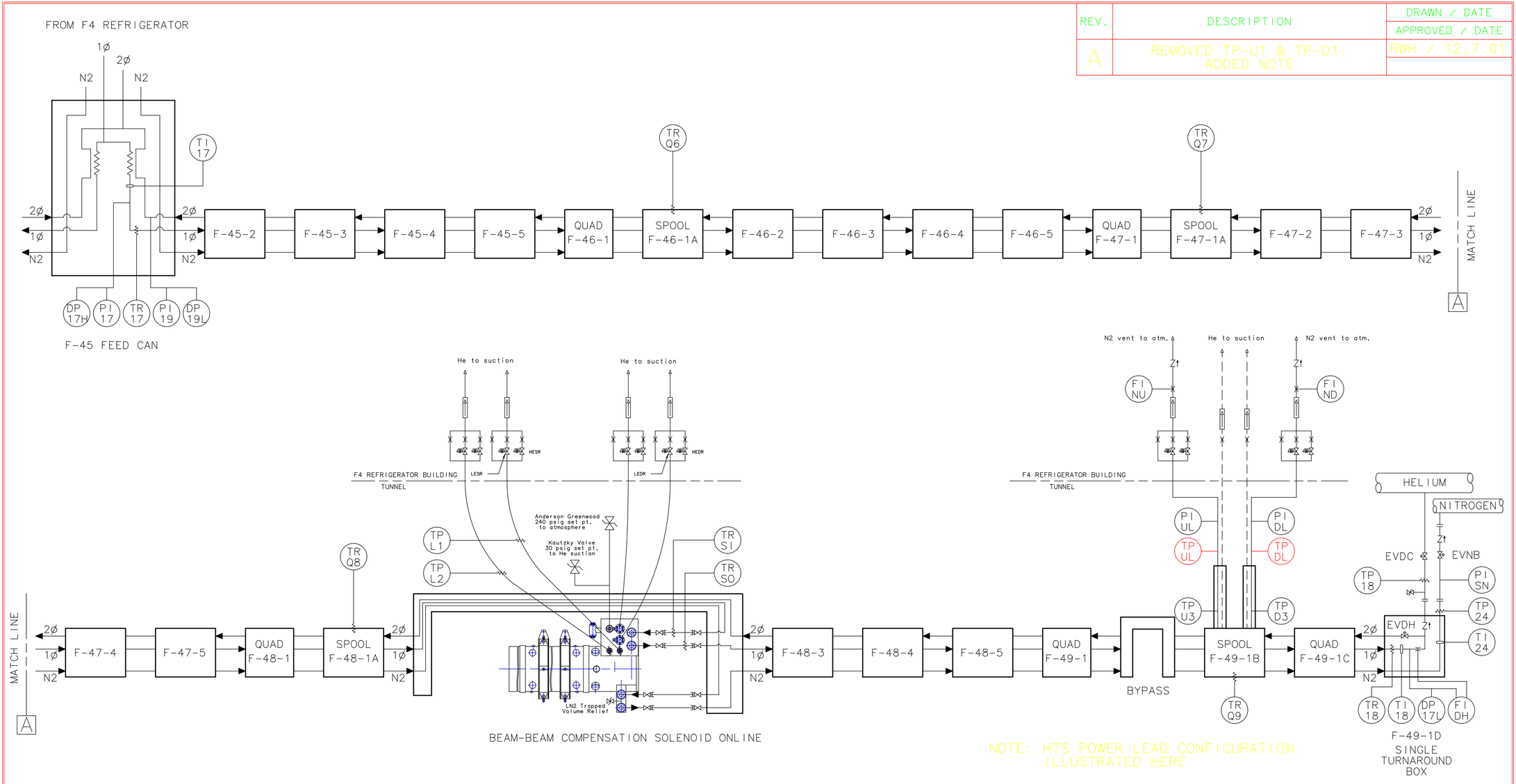

BEAM-BEAM COMPENSATION SOLENOID ONLINE

NOTE: HTS POWER LEAD CONFIGURATION ILLUSTRATED HERE

FOR CONVENTIONAL POWER LEADS, REF 1650-ME-258275

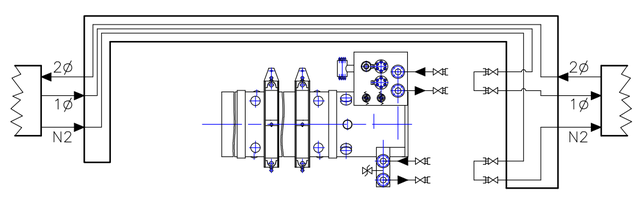

BEAM-BEAM COMPENSATION SOLENOID OFFLINE

UNLESS OTHERWISE SPECIFIED			ORIGINATOR	A. MARTINEZ	1/22/01
.XX	.XXX	ANGLES	DRAWN	A. MARTINEZ	1/22/01
± .02	± .005	± .5°	CHECKED		
1. BREAK ALL SHARP EDGES 1/64 MAX.			APPROVED		
2. DO NOT SCALE DRAWING.			USED ON		
3. DIMENSIONS BASED UPON ANSI Y14.5M-1982					
4. MAX. ALL MACH. SURFACES 125√			MATERIAL		

FERMI NATIONAL ACCELERATOR LABORATORY
UNITED STATES DEPARTMENT OF ENERGY

BEAMS CRYOGENIC SYSTEMS F48 - DOWNSTREAM CRYOGENIC FLOW SCHEMATIC

SCALE	FILMED	DRAWING NUMBER	REV.
FULL		1650-MC-258970	A

CADFILE: .asc | CREATED WITH I-DEAS MS6Am1 | USER NAME: x